SHIMADZU

INSTRUCTION MANUAL
UV-1601
User's System Guide

SHIMADZU CORPORATION
ANALYTICAL INSTRUMENTS DIVISION
KYOTO JAPAN

206-93068E

INSTRUCTION MANUAL
USER'S SYSTEM GUIDE
UV-1601
SHIMADZU
SPECTROPHOTOMETER
(P/N 206-67001)

Read the instruction manual thoroughly before you use the product. Save this instruction manual with care so that you can use it any time you need it.

SHIMADZU CORPORATION
ANALYTICAL INSTRUMENTS DIVISION
KYOTO, JAPAN

Shimadzu Corporation provides this publication "as is" without warranty of any kind, either express or implied, including, but not limited to the implied warranties of merchantability or fitness for a particular purpose.

All rights are reserved, including those to reproduce this publication or parts thereof in any form without permission in writing from Shimadzu Corporation.

Information in this publication is subject to change without notice and does not represent a commitment on the part of the vendor.

Any errors or omissions which may have occurred in this publication despite the utmost care taken in its production will be corrected as soon as possible, but not necessarily immediately upon detection.

Copyright© Shimadzu Corporation 1994.

Precautions for Safe Operation

UV-1601 is a UV-Visible Spectrophotometer.

To operate this equipment safely, strictly observe the following precautions. If not observed, the safety may be compromised.

1. Do not use the equipment for any purpose other than the above-mentioned types of analysis.
2. Follow the procedures described in the instruction manual.
3. Observe all warnings and cautions.
4. Do not disassemble or modify the equipment without the express approval of an authorized Shimadzu Representative.
5. For internal repair of the equipment, contact your Shimadzu Representative.

In this manual, the meaning of caution signs are provided as follows.

WARNING	**indicates a potentially hazardous situation which, if not avoided, could result in death, serious injury or moderate injury.**
CAUTION	**indicates a potentially hazardous situation which, if not avoided, could result in minor injury, or may result in machine damage.**
NOTE	**is used to increase the work efficiency or to help comprehension of the description.**

In this manual, the meaning of safety symbols are provided as follows.

⚠	**Voltage is dangerously high.**
⚠	**Hot Surface**

Warning labels indicated on the equipment

WARNING

HOT SURFACE

The light source and the housing gets very hot. Turn off the power switch of the unit, allow the unit to cool sufficiently, and replace the light source.

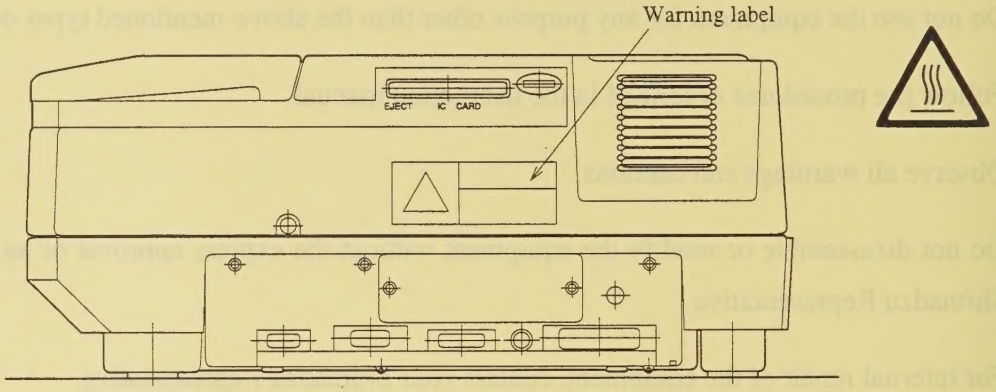

Fig. 1 UV-1601

WARNING

ELECTRICAL SHOCK

There is a possibility of electric shock. Before replacing the fuse, turn off the power and remove the power cord.

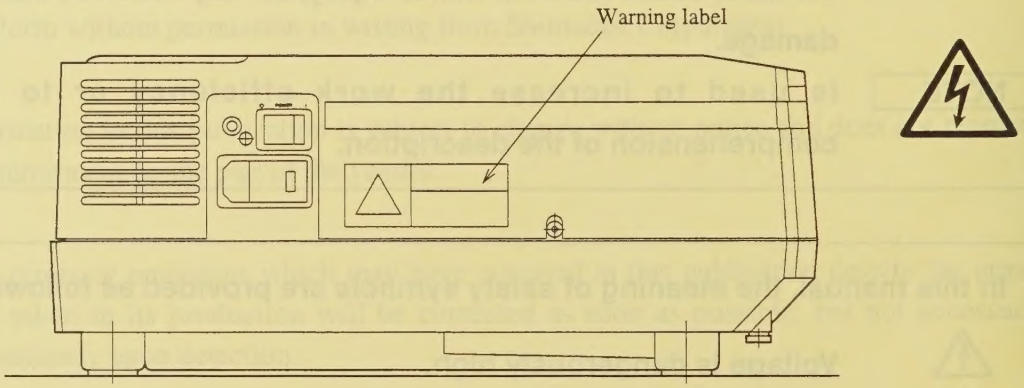

Fig. 2 UV-1601

Symbols indicated on the unit

Symbol	Contens
~	Indicates current (a. c.).
⏚	Indicates protective conductor terminal.
|	Indicates power ON.
○	Indicates power OFF.

Regulatory Information

For Europe:

The product complies with the requirements of the EMC Directive 89/336/EEC and Low Voltage Directive 73/23/EEC.

Product name	: UV-Visible Spectrophotometer
Model Name	: UV-1601
Manufacturer	: SHIMADZU CORPORATION ANALYTICAL INSTRUMENTS DIVISION
Address	: 1, NISHINOKYO-KUWABARACHO, NAKAGYO-KU, KYOTO, 604, JAPAN
Authorized Representative in EU	: SHIMADZU EUROPA GmbH
Address	: Albert-Hahn-Strasse 6-10, D-47269 Duisburg F.R.Germany

Digitized by the Internet Archive
in 2026 with funding from
University of Toronto

https://archive.org/details/uoftmanuals008

CONTENTS

1. Installation 1-2

1.1 Parts Inspection 1-4

1.2 Installation Site 1-5

1.3 Connecting Power 1-5

1.3.1 Power Supply 1-5

1.3.2 Ground 1-5

1.3.3 Connecting the Power Cable 1-5

1.4 Installation Function Check 1-7

1.4.1 Baseline Flatness 1-7

1.4.2 Wavelength Accuracy 1-9

1.5 Electro Magnetic Compatibility 1-12

2. Construction 2-2

2.1 Exterior View 2-2

2.1.1 Front and Top Views 2-2

2.1.2 Left Side Vies 2-3

2.1.3 Right Side View 2-4

2.2 Sample Compartment 2-6

2.3 Keyboard 2-7

2.4 Light Source Compartment 2-9

2.5 Photometry System 2-10

2.5.1 Optical System 2-10

2.5.2 Electrical System 2-12

3. Maintenance & Checking 3-2

3.1 Daily Maintenance & Periodic Maintenance 3-2

3.2 Initialization & Error Display 3-3

3.3 What To Do IF System Does Not Operate Properly 3-5

3.4 Replacing Light Source 3-8

3.4.1 Light Source Specifications 3-8

3.4.2 Light Source Replacement Procedure 3-9

3.5 Replacing Fuse 3-13

3.6 Cleaning the Unit 3-15

3.7 Precaution During Transportation of the Unit 3-16
3.8 List of Consumable Part, Spare Parts 3-17

4. Specifications 4-2
4.1 Hardware Specifications 4-2
4.2 Software Specifications 4-4

5. Optional Accessories 5-2
5.1 Printer 5-2
5.1.1 Installation Procedure 5-2
5.1.2 Operating Procedure 5-4
5.2 Multi-cell, 8/16 Micro-Multicell Sample Compartment 5-5
5.2.1 Installation Procedure 5-5
5.2.2 Operating Procedure 5-7
5.3 CPS-240 5-8
5.3.1 Installation Procedure 5-8
5.3.2 Operating Procedure 5-9
5.4 Sipper 5-10
5.4.1 Installation Procedure 5-11
5.4.2 Operating Procedure 5-12
5.5 Syringe Sipper 5-13
5.5.1 Installation Procedure 5-13
5.5.2 Operating Procedure 5-13
5.6 Removing & Securing the "Cover, Sample Compartment" 5-15
5.6.1 Removing the "Cover, Sample Compartment" 5-15
5.6.2 Securing the "Cover, Sample Compartment" 5-16
5.7 IC Card 5-18
5.7.1 Program Pack 5-18
5.7.2 Data Pack 5-19
5.8 List of Optional Accessories 5-21

6. Index 6-1

Chapter 1 Installation

CONTENTS

1.1 Parts Inspection 1-2
1.2 Installation Site 1-4
1.3 Connecting Power 1-5
1.3.1 Power Supply 1-5
1.3.2 Ground 1-5
1.3.3 Connecting the Power Cable 1-5
1.4 Installation Function Check 1-7
1.4.1 Baseline Flatness 1-7
1.4.2 Wavelength Accuracy 1-9
1.5 Electro Magnetic Compatibility 1-12

1.1 Parts Inspection

This instrument is shipped with the following items. Upon opening the shipping container, confirm that all of the listed parts are accounted for in your shipment.

Table 1.1.1 Standard Contents

	Description		Part No.	Qty.	Comments
1	Spectrophotometer (One of the following) For 100V, 120V, 220V, 240V sites For 230V site		 206-67010 206-67010-01	1	
2	Standard Accessories (One of the following) For 100V, 120V sites For 220V, 230V, 240V site		 206-67099 206-67099-01	1	
	2-1	AC Power Cord	071-60814-01 or 071-60814-05	1	(for 100, 120V) (for 220, 230, 240V)
	2-2	Fuses	072-01652-22 or 072-01652-19	2	4.0A (for100, 120V) 2.0A (for 220, 230, 240V)
	2-3	Ground Adapter	071-60803-01	1	(for 100, 120V)
3	Instruction Manual		206-93068	1	User's System Guide
4	Instruction Manual		206-93070	1	Operation Guide

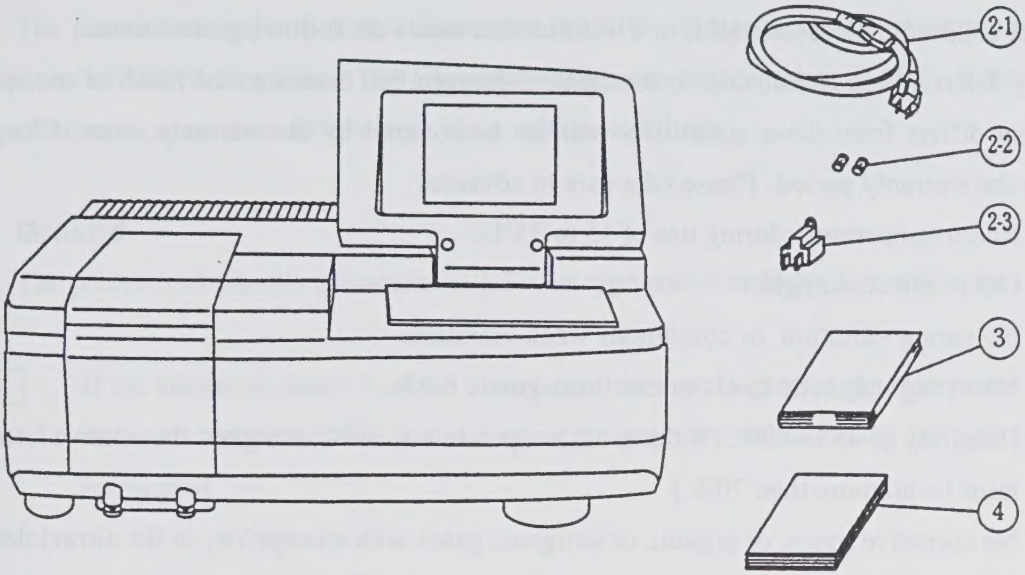

Fig.1.1.1 Standard Contents

Note A thin protective film has been applied to the surface of the keyboard. This film will not be a hindrance if the keyboard is used with it in place, but if the film begins to peel during use and makes the keyboard difficult to see, peel it entirely from the surface.

1.2 Installation Site

In order to fully utilize the features of this instrument and to be able to use it for a long time in a stable condition, please install it in a location that meets the following conditions.

Any deterioration in function or mechanical damage that occurs as the result of use in a location that differs from these conditions will not be covered by the warranty, even if they occur within the warranty period. Please take care in advance.

- Room temperature during use of 15 to 35°C.
- Out of direct sunlight.
- No strong vibration, or continuous weak vibration.
- No strong magnetic fields or electromagnetic fields.
- Humidity of 45 to 80%. (If the room temperature is 30°C or higher, the relative humidity must be no more than 70%.)
- No corrosive gases, or organic or inorganic gases with absorptivity in the ultraviolet range.
- Low amounts of dust.

The dimensions of the UV-1601 are 550mm×470mm×380mm (220mm at closing LCD unit) (W×D×H). The minimum floor space required for installation is 700mm×500mm (W×D). In addition, do not place anything in front of the fan on the left side as it may hinder ventilation.

The UV-1601 weighs 18kg. Install the unit on a flat surface that will support this weight.

1. 3 Connecting Power

1.3.1 Power Supply

The power consumption of this instrument is 160VA. Please use a power supply with a capacity of 160VA or greater. The allowable voltage fluctuation range is 10%. If the voltage fluctuates more than 10%, please use a voltage stabilizer.

1.3.2 Ground

The power cord for this instrument is a 3-wire type which includes a ground wire.

Note If the electrical outlet is of the 2-wire type, be sure to ground the instrument from the earth terminal of the power cord or the ground terminal on the left side of the instrument.

1.3.3 Connecting the Power Cable

(1) Check to see that the power switch on the unit is OFF (so that ○ is pushed in).

(2) Check to see that the voltage setting switch display is the power supply voltage being used.

If the power supply voltage displayed is different from the one being used, use a standard screwdriver to open the fuse holder lid, remove the circular plug and insert the plug in the position that display the power supply voltage being used. 50Hz and 60Hz are common. (See "3.5 Replacing Fuses" for how to open the fuse holder lid.)

Warning **ELECTRICAL SHOCK**

There is a possibility of electric shock. Before replacing the fuse, turn OFF the power and remove the power cord.

Note Use a 4A fuse for 100 - 120V setting, and a 2A fuse for 220 - 240V power voltage setting.

(3) Insert the **enclosed power cable** into the power connector on the left side of the unit.

(4) Insert the power cable into the outlet.

(5) Turn ON the unit power switch.

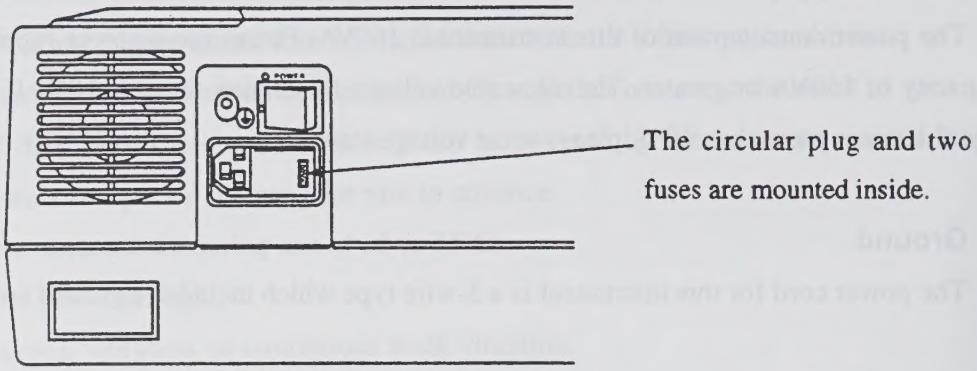

Fig. 1.3.1 Voltage Selector

Once installation is complete, check the function of the following items. In the event that a functions(s) does not fulfill the specification listed below due to a shock during shipment, immediately notify the nearest service representative.

1.4.1 Baseline Flatness Procedure

Table 1.4.1 Procedure (Baseline Flatness)

Step	Operation, Monitor Display	Key Operation
1	Turn ON power (Let sit for 30 minutes after automatic initialization)	
2	Mode 550.0nm 0.000A 1.Photometric 2.Spectrum 3.Quantitation 4.Kinetics 5.Time Scan 6.Multi-Component 7.Optional Program Pack 8.Utilities Input item No. Params IC Card PC Ctrl	
3	Select "2. Spectrum"	[2]
4	Set the measurement mode to "ABS" (Absorbance mode).	Enter [1] until "ABS" Is displayed.
5	Set scan range to 1100~190nm	[2][1][1][0][0][E] [1][9][0][E]
6	Set photometric range to –0.01~0.01Abs.	[3][-][0][.][0][1] [E][0][.][0][1[E]
7	Set scan speed to "Slow"	[4][4][E]
8	Spectrum 1100.0nm 0.000A 1.Meas. mode : ABS 2.Scanning range: 1100 nm ~ 190 nm 3.Rec. range : -0.01A ~ 0.01A 4.Scan speed : Slow 5.No. of scans : 1 6.Display mode : Sequential Input item No. (START to Meas.) BaseCorr CalCurv SmplCntl SavPara	

continued.

Step	Operation, Monitor Display	Key Operation
9	Perform baseline correction.	[F1]
10	Start measurement.	[START/STOP]
11	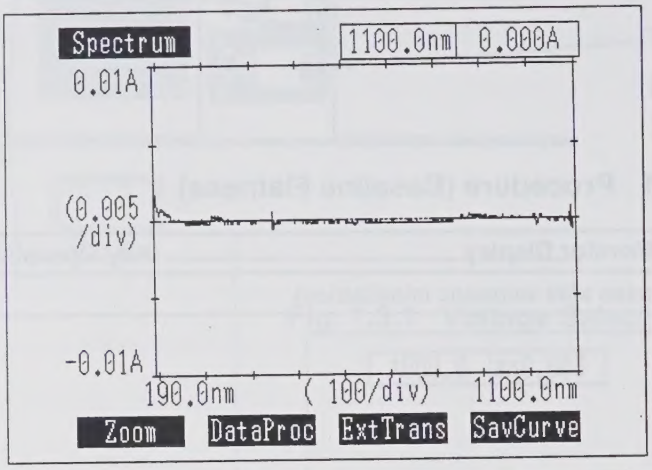	
12	When baseline measurement restarts, press the [START/STOP] key again. When you press the [RETURN] key, the process will return to Step 8. At this point, press the [MODE] key to return to Step 2.	

Normal Specification

Baseline flatness should be within ±0.002Abs, not including shock noise.

1.4.2 Wavelength Accuracy

Measurement Procedure

Start from Step 4 of the "Baseline Flatness" procedure.

Table 1.4.2 Procedure (Wavelength Accuracy)

Step	Operation, Monitor Display	Key Operation
1	Set the measurement mode to "E".	Enter [1] until "E" is displayed
2	Set the scan range to 660~650nm.	[2][6][6][0][E] [6][5][0][E]
3	Set the recording range to 0~150E	[3][0][E][1][5][0][E]
4	Set scan speed to "Slow".	[4][4][E]
5	Set the gain to 3.	[7][3][E]
6	Set the light source selection to the D2 lamp.	[8][2][E]
7	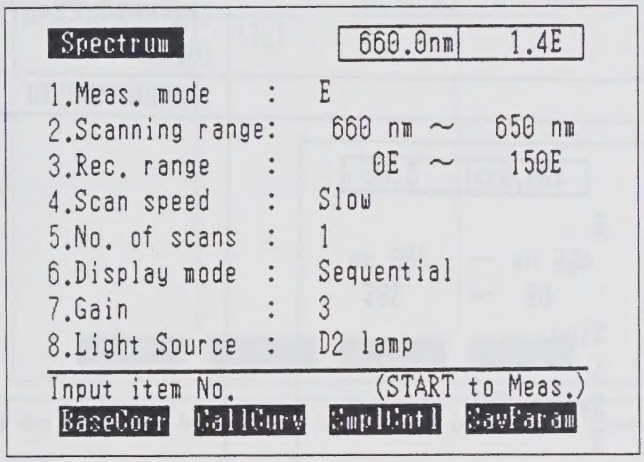	
8	Start measurement.	[START/STOP]
9	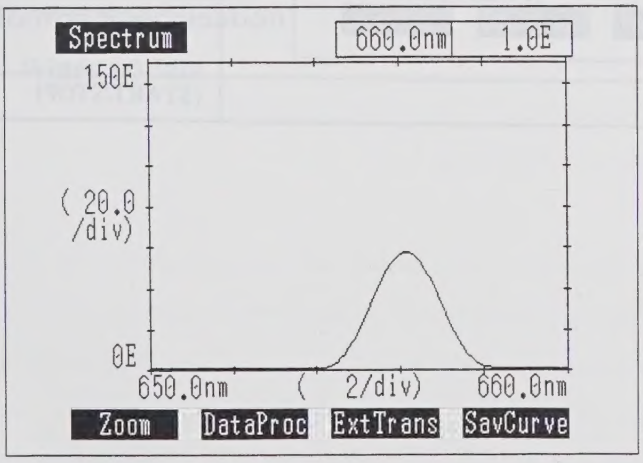	

continued.

Step	Operation, Monitor Display	Key Operation
10	Perform peak detection.	[F2]
11	Peak detection Abscis. E Abscis. E 656.1 57.4 652.2 1.4 Graph Valley	
12	Find the difference between the wavelength of the peak found and 656.1nm.	
13	Return to the Parameter Setting screen.	[RETURN], [RETURN]
14	Set the scan range to 490~480nm.	[2][4][9][0][E][4][8] [0][E]
15	Set the recording range to 0~30E	[3][0][E][3][0][E]
16	Spectrum 490.0nm 6.8E 1.Meas. mode : E 2.Scanning range: 490 nm ~ 480 nm 3.Rec. range : 0E ~ 30E 4.Scan speed : Slow 5.No. of scans : 1 6.Display mode : Sequential 7.Gain : 3 8.Light Source : D2 lamp Input item No. (START to Meas.) BaseCorr CallCurv SmplCntl SavParam	
17	Start measurement.	[START/STOP]

continued.

Step	Operation, Monitor Display	Key Operation
18	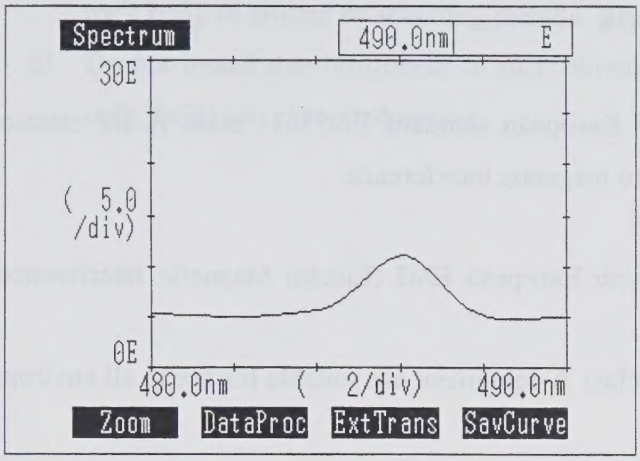	
19	Perform peak detection.	[F2]
20	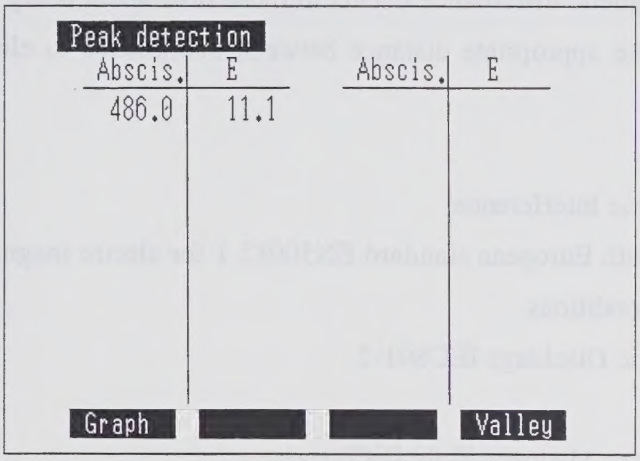	
21	Find the difference between the wavelength of the peak found and 486.0nm.	

Normal Specification

Within ±0.5nm

1.5 Electro Magnetic Compatibility

Note Descriptions of this section are only applied to the model for EU (European union) market : 206-67001-34

This instrument complies with European standard EN55011 class A for electro magnetic emission and EN50082-1 for electro magnetic interference.

1) Electro Magnetic Emission

This instrument complies with European EMI (Electro Magnetic Interference) standard EN55011 class A equipment.

The standard classifies that class A equipment are suitable for use in all environment other than domestic environment.

Note When a electro magnetic disturbance occurs to those instrument being used close to this product, Take appropriate distance between instruments to eliminate the disturbance.

2) Immunity to Electro Magnetic Interference

This instrument complies with European standard EN50082-1 for electro magnetic immunity.Stated below are the test conditions

1) Immunity to Electro Static Discharge IEC801-2

8kV Air Discharge.

2) Immunity to Strong Electro Magnetic Field IEC801-3

3V/m

Performance criteria for the test is as follows.

Display on the operation panel should not be changed except for photometric read out value.

3) Immunity to burst/fast transient noise from power supply. IEC801-4

2kV to AC power line and protective earth.

Note Compliance to the standard does not ensure that the instrument can work with any level of Electro Magnetic Interference stronger than the level tested.

Interference greater than the value specified in the condition above may cause malfunction of the instrument.

To avoid electro magnetic disturbance, following notices are recommended to be followed.

1) Before touching the instrument, discharge the electrostatic charged in operator's body to ground by touching metallic structure connected to ground.
2) Do not install this instrument in such environment where strong electro magnetic fields are generated nearby.

Chapter 2 Construction

CONTENTS

2.1 Exterior View 2-2
2.2 Sample Compartment 2-6
2.3 Keyboard 2-7
2.4 Light Source Compartment 2-9
2.5 Photometry System 2-10

2.1 Exterior View

2.1.1 Front and Top Views

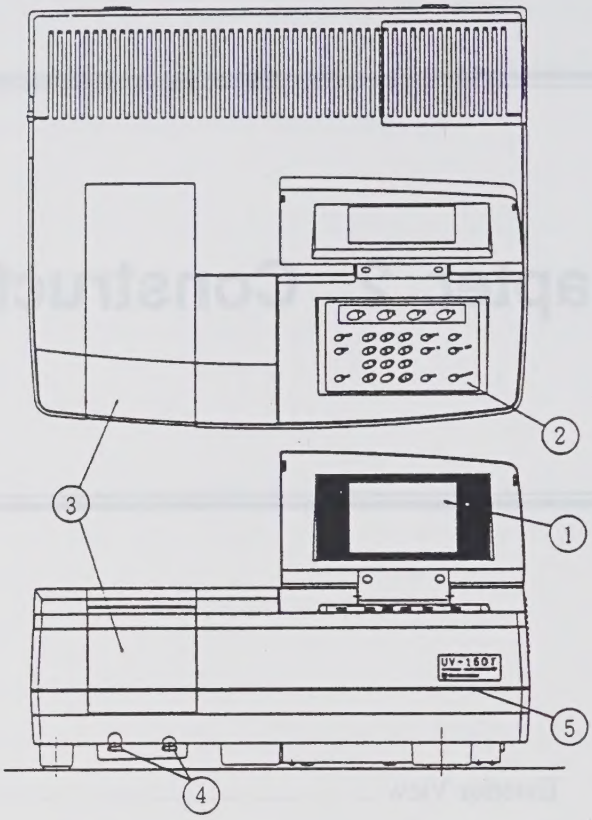

Fig. 2.1.1 Front and top views of UV-1601

① LCD Unit

This displays the operation menus and measurement results, etc. This is a 320×240 dot resolution, backlit LCD unit. You may adjust the angle and intensity for optimum visibility.

② Keyboard

This is the input component for giving operation commands and numeric values to the instrument. See "2.3 Keyboard" for detailed instructions.

③ Sample Compartment

This is the component in which the sample being measured is set. See "2.2 Sample Compartment" for details.

④ Sample Compartment Set Screws (knurled thumbscrews). These are screws for fastening the sample compartment unit.

⑤ LED

This lights when the power to the unit is ON.

2.1.2 Left Side ViDes

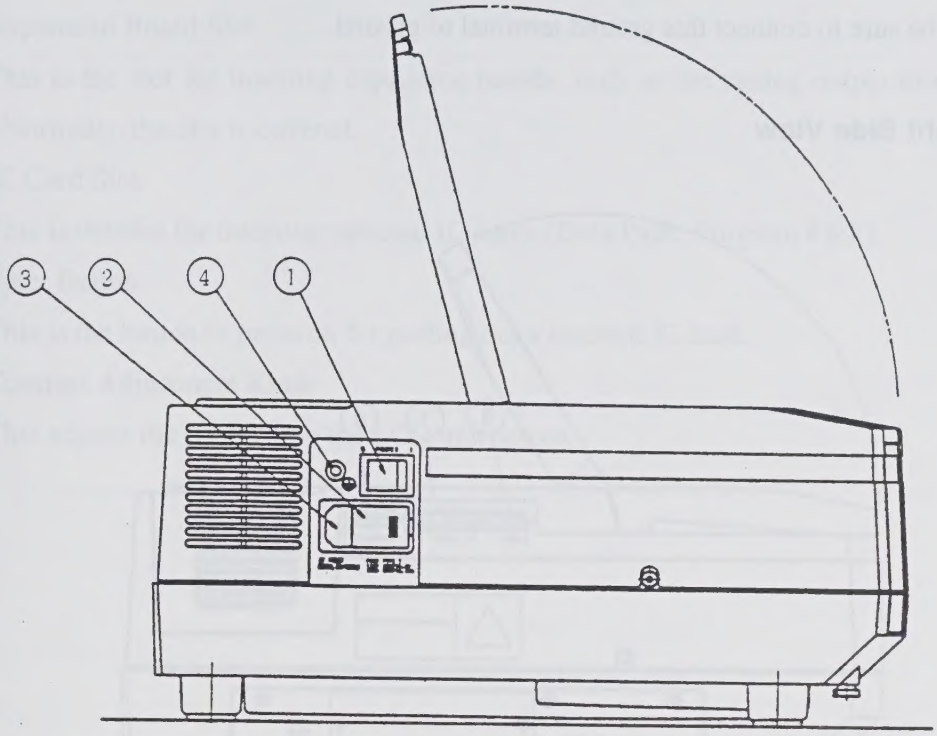

Fig. 2.1.2 Left side view of UV-1601

① Power Switch

This is the switch for turning the unit ON/OFF.

ON : when I is pushed in.

OFF : when ○ is pushed in.

② Voltage Selector/Fuse Holder

You can switch this between 4 levels (AC100, 120, 220, 240 or AC100, 120, 230, 240) according to the input power. Use two 4.0A fuse for the 100, 120V range, two 2.0A fuses for the 220, 230, 240V range.

Warning	**ELECTRICAL SHOCK**
	There is a possibility of electric shock. Before replacing the fuse, turn OFF the power and remove the power cord.

③ AC Power Connector

Connect the enclosed AC power cable to supply power from an AC electrical outlet.

④ Ground Terminal

This is the terminal for connecting to ground When using an ungrounded power supply, you must be sure to connect this ground terminal to ground.

2.1.3 Right Side View

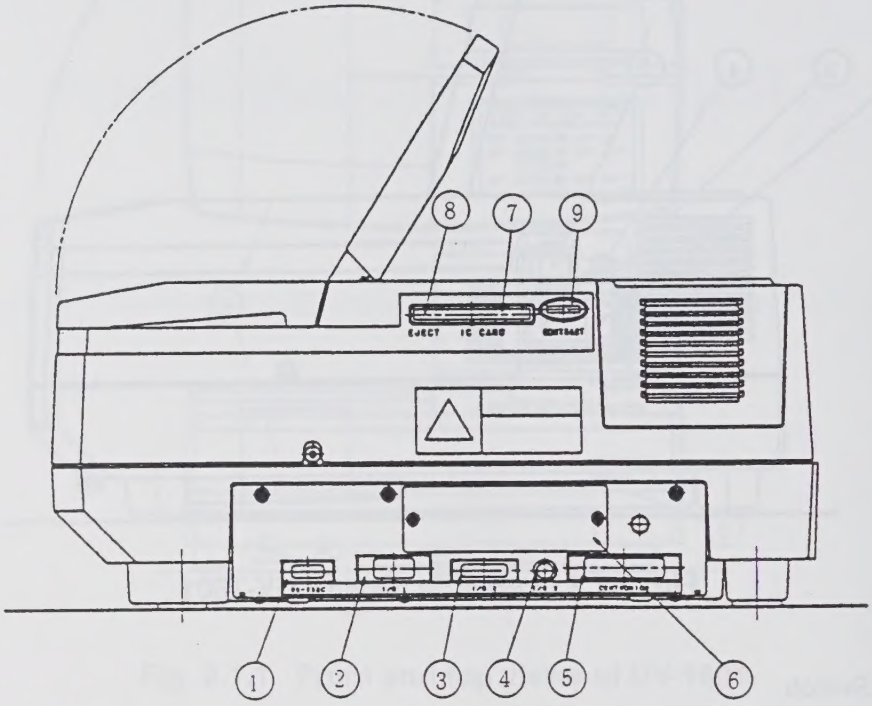

Fig. 2.1.3 Right side view of UV-1601

① RS-232C Connector

This is a standard RS-232C interface. This can be used to connect an optional printer or a computer equipped with a standard RS-232C interface.

② Attachment Connector (I/O 1)

This is the interface for connecting the optional "Auto Sample Changer (ASC-5)" or "Cell Positioner (CPS-240A)" accessory.

③ Attachment Connector (I/O 2)

This is the interface for connecting the optional "Sipper 160" or "Syringe Sipper" accessory.

④ Attachment Connector (I/O 3)

This is the output interface through which temperature settings are transmitted from the UV-1601 to the temperature regulator when the optional "Thermoelectrically Temperature Controlled Sipper Unit (TSU-2200)" accessory is installed.

⑤ Printer Connector (Centronix)

This is the interface for connecting an optional printer

⑥ Expansion Board Slot

This is the slot for inserting expansion boards, such as the analog output interface board, etc. Normally, the slot is covered.

⑦ IC Card Slot

This is the slot for inserting optional IC cards (Data Pack, Program Pack).

⑧ Eject Button

This is the button to press on for pulling out a inserted IC card.

⑨ Contrast Adjustment Knob

This adjusts the contrast on the LCD unit screen.

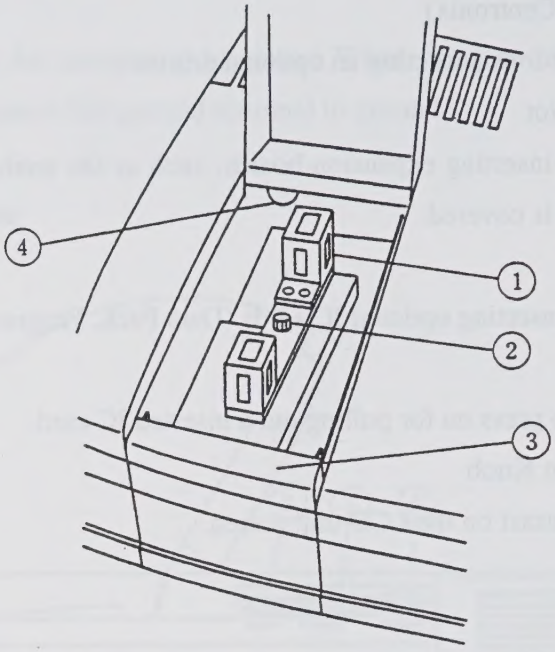

Fig.2.2.1 Sample compartment

① Cell Holder

The cell holder for the rectangular 10mm light path cells has one sample cell holder and one reference cell holder.

② Cell Holder Set Screws

The cell holder can be easily removed by loosening the cell holder set screws.

③ Cover, Sample Compartment

When using a flow cell, etc., holes are needed to pass tubing, etc. through. Therefore, this "Cover, Sample Compartment" can be removed and exchanged with different types of front panels.

(Please refer to Chapter 5."5.5 Removing &Securing "Cover, Sample Compartment")

④ Multi-cell Holder Drive Connector

This is the connector for driving the optional "Multi-cell Holder" accessory.

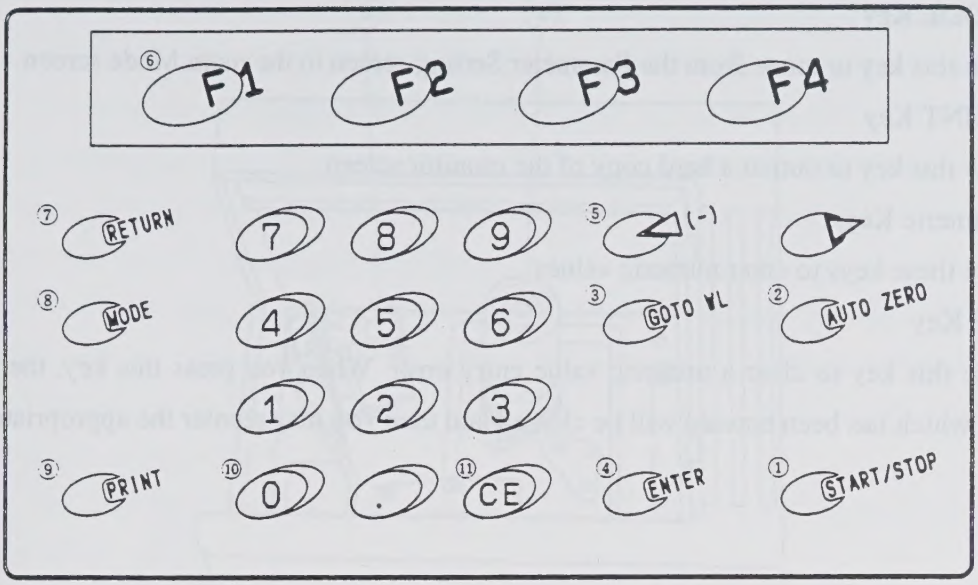

Fig. 2.3.1 Keyboard

① START/STOP Key

This is the key for starting and stopping measurement once parameter setting has been completed.

② AUTO ZERO Key

When you press this key, the current wavelength will automatically be set to 0Abs (100%T). Make sure that prior to sample measurement a blank cuvette is placed in both sample and reference sides.

③ GOTO Key

This is the key that is used to change the current wavelength.

④ ENTER Key

When you enter a value, press this key after the value to set the entering value.

⑤ Cursor Keys (◁(–), ▷)

Use these keys to move the cursor in the LCD screen left or right. The left cursor key can also be used to enter a negative (–) value when entering numeric values.

⑥ Function Keys (F1 through F4)

These are the keys corresponding to the functions that are displayed at the bottom of the LCD unit screen.

⑦ RETURN Key

Use this key to return to the one preceding screen from the current screen.

⑧ MODE Key

Use this key to move from the Parameter Setting screen to the main Mode screen.

⑨ PRINT Key

Use this key to output a hard copy of the monitor screen.

⑩ Numeric Keys

Use these keys to enter numeric values.

⑪ CE Key

Use this key to clear a numeric value entry error. When you press this key, the numeric value which has been entered will be cleared and then you may reenter the appropriate value.

2. 4 Light source Compartment

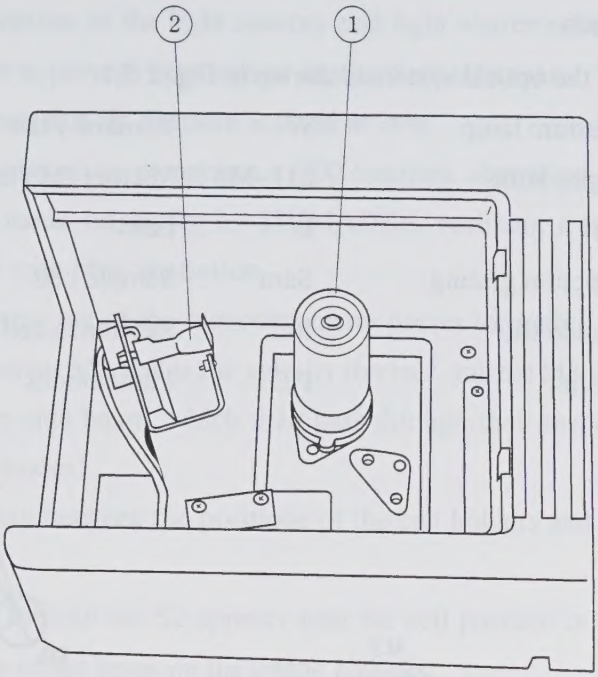

Fig 2.4.1 Light Source compartment

Warning	**HOT SURFACE** The light source and light source compartment both get very hot. To change a light source, turn off the power and then change the light source only after checking to see than it had cooled sufficiently.

① Deuterium Lamp (D2 Lamp)

This is the ultraviolet range (190nm to light source switch wavelength*) light source.

② Tungsten Halogen Lamp (WI Lamp)

This is the visible & near infrared range (light source switch wavelength* to 1100nm) light source.

* Light source switch wavelength

The light source switch can be set anywhere in the range from 295nm to 364nm in 0.1nm increments. For details, refer to the "Operating Guide", Chapter 10, "10.2 Setting Instrument Parameters", <4. Light Source Switching Wavelength>.

2.5.1 Optical System

A schematic of the optical system is shown in Fig. 2.5.1

D2	: Deuterium lamp	W	: Window Plate
WI	: Halogen lamp	M1~M5	: Mirrors (M3 is a half-mirror)
F	: Filter	L	: Lens
G	: Diffraction grating	Sam	: Sample cell
S1	: Entrance slit	Ref	: Reference cell
S2	: Exit slit	P.D.	: Photodiodes

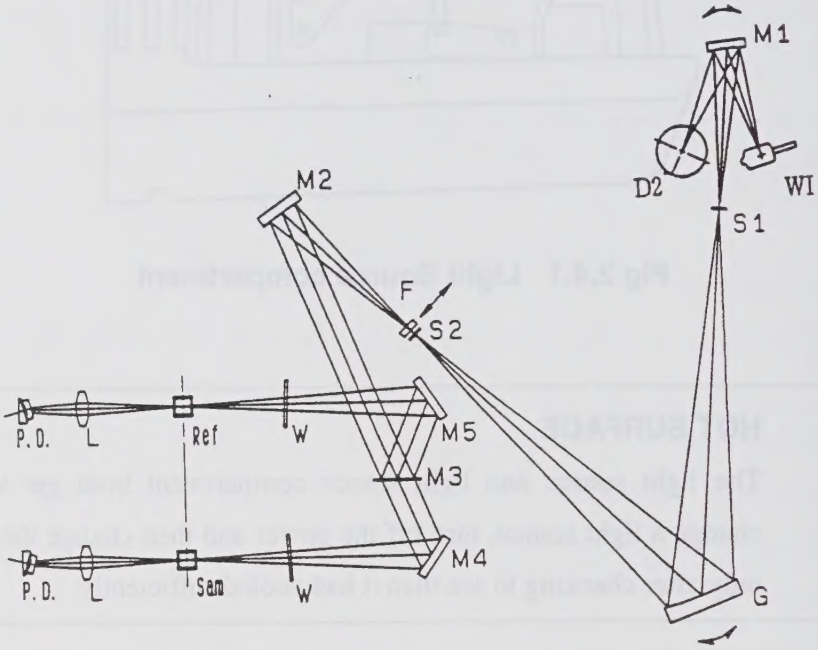

Fig 2.5.1 Schematic of optical system

The light coming from the light source (deuterium lamp D2 or halogen lamp WI) is reflected by mirror M1 and then enters the monochromator. Light source switching is entirely automatic, with the instrument selecting the next light source according to the wavelength.

Deuterium lamp: 190nm to light source switch wavelength
Halogen lamp: Light source switch wavelength to 1100nm
The light source switch wavelength can be set anywhere in the range from 295.0 to 364.0nm (default setting: 340.8nm)

With the exception of the light sources and light source mirrors, the optical system is constructed so as to prevent exposure to dust and contaminants.

The monochromator slit aperture is fixed at 2nm.

The diffraction grating comprises a 900 line/mm aberration-correcting concave holographic grating made originally by SHIMADZU, realizing a monochromator of simple construction and with little aberration.

The light coming out of the monochromator passes through a stray light cutting filter F and strikes the mirror M2 and is the split by the half -mirror M3 into the sample-side beam and the reference-side beam, which then pass through their respective sells and strike the detectors (photodiodes).

The relationship between the positions of the cell holders and the beams is as shown in Fig. 2.5.2.

The image of the exit slit S2 appears near the cell position in the sample compartment. The cross section of the beam on the image plane is

Width approx. 1mm Height approx. 10mm

Since the beam cross section is wider than the above value at the front surface of the cell, when microcells (the width of light-through window is under 2.0mm) are being used, please order the "Micro Cell Holder with mask" (P/N 204-06896) separately.

Whenever possible, please use black cells for the microcells, as they are minimally affected by scattered light.

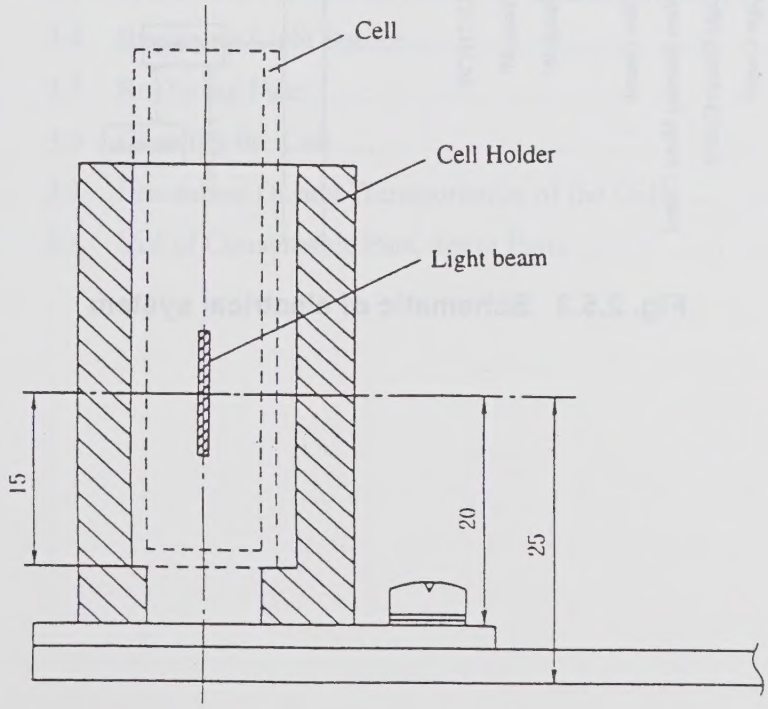

Fig. 2.5.2 Positional relationship of cell holder (cell) and light beam

2.5.2 Electrical System

A schematic of the electrical system is shown in the figure below.

The center of control is the microcomputer (CPU), which performs all controls of light sources, switching of light sources, filter switching, wavelength scanning pulse moter, LCD monitor display, keyboard and printer, RS-232C interface etc.

After the sample-side beam and reference-side beam are picked up by detectors (photo-diodes) and converted into the voltage by pre-amplifier, The signal is then fed into an A/D converter and finally read by the CPU.

On energy-measurment mode (of spectrum mode) only the signal from the sample-side beam is read. In this case, S/R switching status is "Normal". If the status "Reverse", only the signal from the reference-side beam is read.

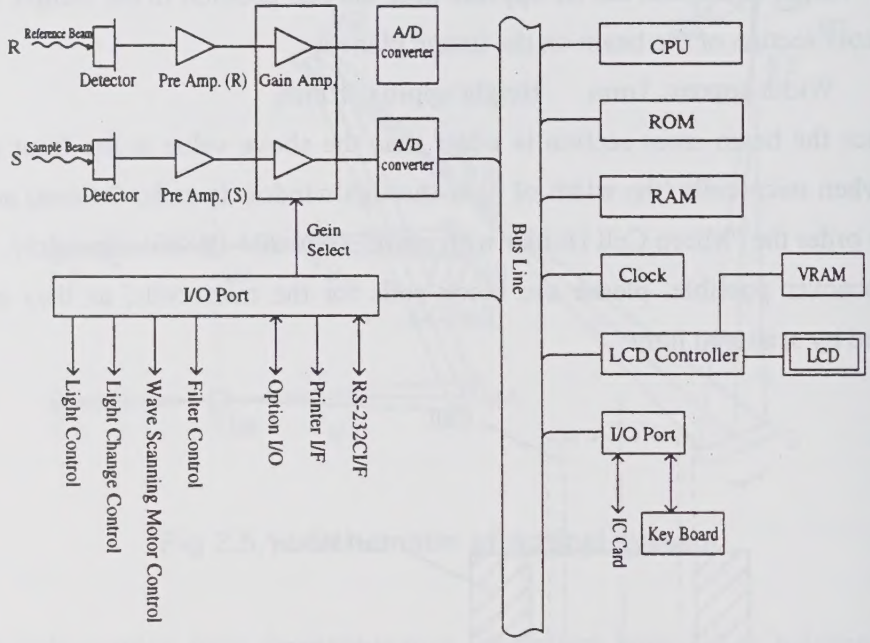

Fig. 2.5.3 Schematic of electrical system

Chapter 3 Maintenance & Checking

CONTENTS

3.1 Daily Maintenance & Periodic Maintenance 3-2
3.2 Initialization & Error Display 3-3
3.3 What To Do If System Does Not Operate Properly 3-5
3.4 Replacing Light Source 3-8
3.5 Replacing Fuse 3-13
3.6 Cleaning the Unit 3-15
3.7 Precaution During Transportation of the Unit 3-16
3.8 List of Consumable Part, Spare Parts 3-17

(1) Cleaning Sample Compartment (Daily)

When handling large numbers of liquid samples, check the floor of the sample compartment for spilled solution samples. Wipe up spilled samples immediately according to Section 3.6 "Cleaning the Unit" in this chapter.

Note Please be aware that if spilled samples are left, they may evaporate and the vaporized gas will fill the light path in the sample compartment, corroding the interior and causing inaccurate measurement results.

(2) Checking Baseline Flatness (Monthly)

Inspect the flatness of the baseline according to the procedure in Chapter 1 "1.4.1 Baseline Flatness". If there is an abnormality in the baseline (the curve is greater than ±0.002Abs), correct the instrument baseline according to Section 3.3, (5) " 'Instrument Baseline Correction' Procedure" in this chapter.

(3) Checking Wavelength Accuracy (Monthly)

Inspect the wavelength accuracy according to the procedure in Operating manual, Chapter 10 " 10.2 Setting Instrument Parameters" <9.Maintenance>. If there is an abnormality in the wavelength accuracy (the peak wavelength shift is greater than 0.5nm), contact your Service Representative.

3. 2 Initialization & Error Display

When the power switch is turned ON, the spectrophotometer performs various checks and initial settings in the order shown in the table on Fig. 3.2.1, and if everything is normal, initialization is completed after about 3.5 minutes. Each step will be highlighted in the display as it is completed. If a step is properly completed, the star next to it is also highlighted. However, if any kind of abnormality is detected, initialization of that step is interrupted without highlighting the star mark. If an error message is displayed, inspect the instrument according to the check point items in the table. If the problem is still unclear, contact your Service Representative and describe the displayed error message.

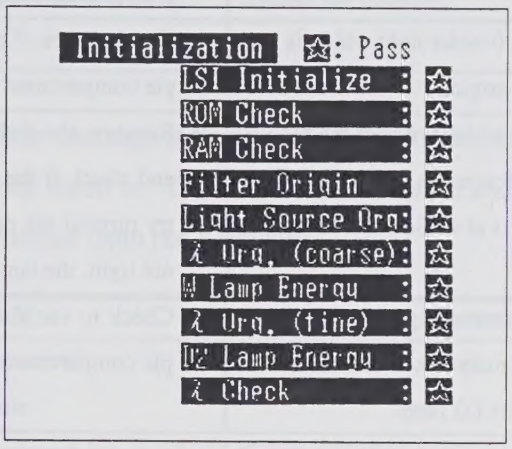

Fig. 3.2.1 Initialization screen

Table 3.2.1 Initialization and Errors

	Display	Description	Remedial Action
1	LSI Initialize	Initialize each I/O	Try turning the power OFF and then ON again. If the same error occurs again, contact your Service Representative.
2	ROM Check	Check program ROM	
3	RAM Check	Check memory elements (RAM)	Try turning the power OFF and then ON again. If the same error occurs again, contact your Service Representative as it is possible that the backup battery is dead.*2
4	Filter Origin	Detect reference position of filter	Try turning the power OFF and then ON again. If the same error occurs again, contact your Service Representative. continued.

continued.

	Display	Description	Remedial Action
5	Light Source Org.	Detect reference position of motor that drives light source switching mirror	Same as above
6	λ Org.(coarse)	Detects mechanical wavelength origin position	Same as above
7	W Lamp Energy	Checks whether or not the WI lamp (tungsten iodine lamp) light energy is at full level	• Remove the light source compartment cover and check if the WI lamp is lit. If it is not lit, try turning the power ON again. If it still does not light, the lamp must be replaced.*1
8	λ Org.(fine)	Checks 0-order light which is the optical origin	• Check to see if there is something in the sample compartment that is obscuring the light.
9	D2 Lamp Energy	Checks whether or not the D2 lamp (deuterium lamp) light energy is at sufficient level	• Remove the light source compartment cover and check if the D2 lamp is lit. If it is not lit, try turning the power ON again. If it still does not light, the lamp must be replaced.*1
10	λ Check	Checks wavelength by detecting the intensity line at 656.1 nm using the D2 lamp	• Check to see if there is something in the sample compartment that is obscuring the light.

*1 Refer to Fig. 3.4.3 and Fig. 3.4.4 on Page 3-10 to remove the light source compartment cover.

Note *2 If you keep photometer in a state of power off for two years, battery charge is gone. Life span of battery is differ with state of using, but in case that "RAM ERROR" occurs frequently, please change battery.

3. 3 What To Do If System Does Not Operate Properly

There are many instances in which the spectrophotometer will not operate properly as the result of consumable part deterioration, an operational error or neglect of maintenance and inspection. Please check the following items. If the cause of operation failure is still unknown after this inspection, contact your Service Representative.

(1) Does not operate at all. Nothing appears on the LCD unit screen.

Checking Point	Remedial Action
1. Is the power cord securely connected?	Securely connect the cord.
2. Is the fuse blown?	Replace the fuse.
3. Is the LCD contrast adjustment knob in the correct position?	Adjust the contrast.

(2) After power is ON, error message is displayed during initialization.
Inspect the check points listed in "Table 3.2.1 Initialization and Errors".

(3) Numbers cannot be entered from the keyboard.

Checking Point	Remedial Action
1. Is an incorrect value being entered? Example GOTO WL=1150nm	Enter the correct value.
2. Is the computer IC or the keyboard defective?	Contact our Service Representative.

(4) Photometry values are odd.

Checking Point	Remedial Action
1. Did you press mistakenly the [AUTO ZERO] key during measurement?	Return to the blank condition (reference condition) and press the [AUTO ZERO] key again. Perform proper processing.
2. Sample processing error	
3. Is the cell being used appropriate?	Do not use a glass cell in the ultraviolet range.

(5) Baseline curve does not meet normal specifications.

Checking Point	Remedial Action
1. When correcting the baseline, did you put a solvent with high absorbance in the cell holder on only one side?	Place cells with the same solvent in both the sample side and the reference side and perform baseline correction again.
2. Is the beam on only one side restricted?	Set the beam conditions so that they are identical on both the sample side and the reference side.
3. Are you using a optional accessory?	Some of the unit specifications may not be met when certain of optional accessories are installed.
4. If none of the above three scenarios applies.	Correct the instrument baseline by the following procedure.

- **"Instrument Baseline Correction" Procedure**

Table 3.3.1 Instrument Baseline Correction Procedure

Step	Operation, Monitor Display	Key Operation
1	Return to the Top Menu.	Press the [RETURN] key until the screen changes. Then press the [MODE] key.
2	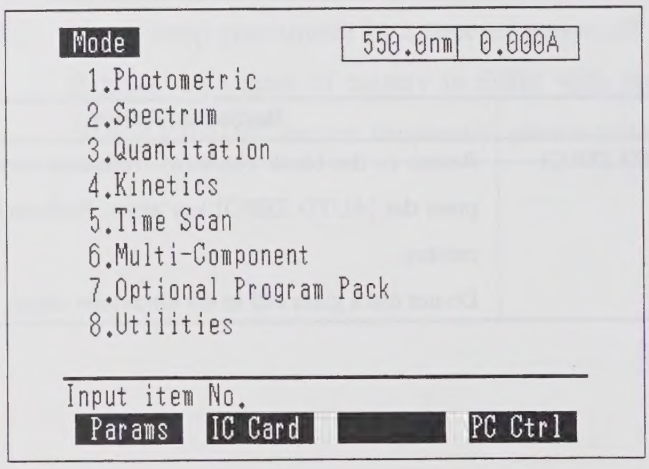	

continued.

Step	Operation, Monitor Display	Key Operation
3	Select "8. Utilities"	[8]
4	**Utilities** 1.Start program : Standard menu 2.Data display : 4 3.S/R exchange : Standard 4.Light source : 340.8 5.Printer : HCP 6.Clock set : 95/10/06 09:24:13 7.D2 lamp off time: 60min 8.Beep : ON 9.Maintenance Input item No.	
5	Select "9. Maintenance"	[9]
6	**Maintenance** 1.Performance check 2.Instrument baseline correction Input item No.	
7	Select "2. Instrument baseline correction"	[2]

3.4.1 Light Source Specifications

Table 3.4.1 Light Source Specifications

	WI Lamp	D2 Lamp
Part No.	062-65004-06	062-65055-05
Type	64440	L-6380
Average life	2000 hours	500 hours
Characteristics	12V 50W	Discharge voltage: 75~95V Discharge current: 300mA Discharge start voltage: 230~350V
Shape	Fig. 3.4.1 (a)	Fig. 3.4.1 (b)

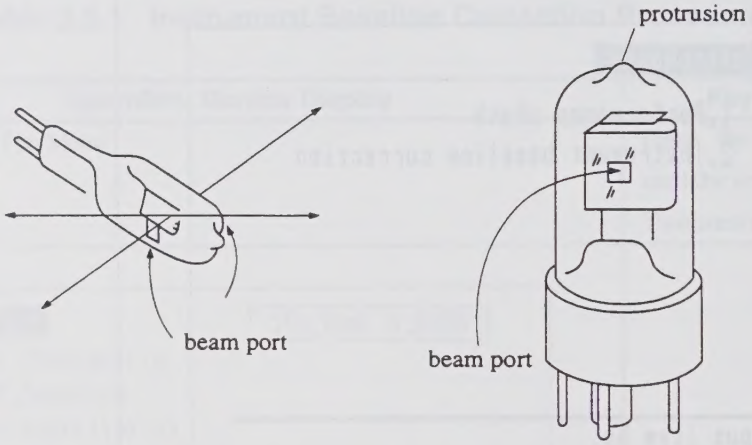

(a) WI Lamp (b) D2 Lamp

Fig. 3.4.1 Light source appearances

3.4.2 Light Source Replacement Procedure

Warning **HOT SURFACE**

The light source and light source compartment both get very hot. To change a light source, turn off the power and then change the light source only after checking to see that it has cooled sufficiently.

Caution

1. Please wear gloves when handling the light source so as not to leave fingerprints on the beam port of the new light source. A fingerprint will burn onto the bulb, and when the light source gets hot, light transmission will deteriorate.
2. Be especially careful when removing and mounting the light source compartment cover so that the back of the cover does not strike the protrusion on the top of the D2 lamp (deuterium lamp). Such a hit could cause a leak in the tube's vacuum.

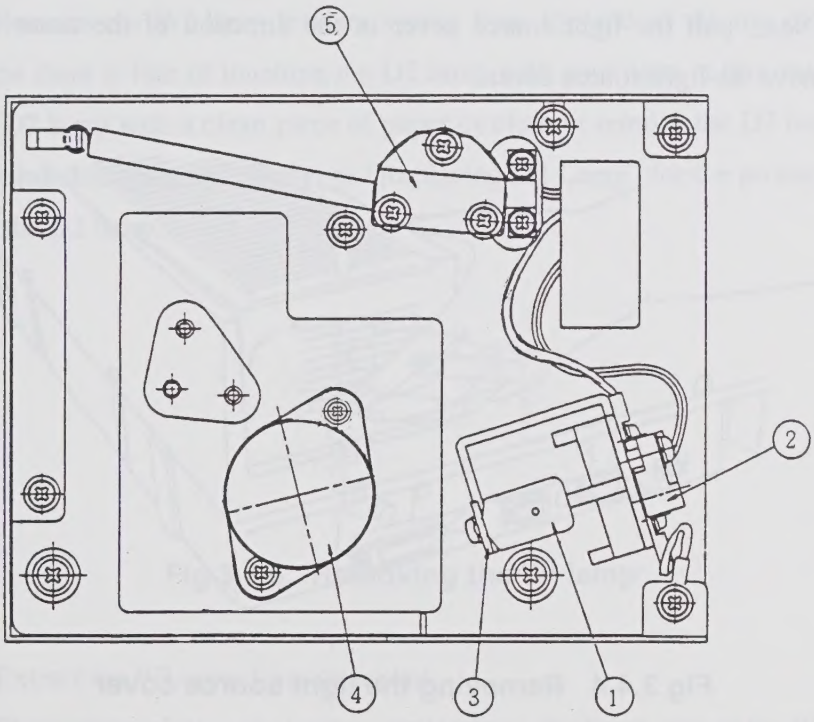

(1) WI lamp
(2) WI lamp socket
(3) WI lamp retainer spring
(4) D2 lamp
(5) Light source switching mechanism

Fig.3.4.2 Interior of light source compartment

- **Replacing the D2 lamp**

(1) Press on the parts indicated by the arrows in Fig.3.4.3 on the sides of the light source cover, lift the cover up and release, the "catch".

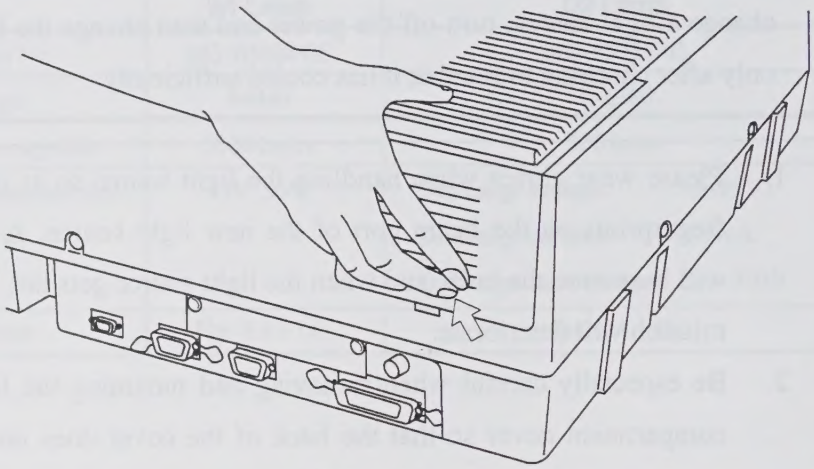

Fig. 3.4.3 Light source cover

(2) Next, pull the light source cover in the direction of the arrow in Fig.3.4.4 to remove the light source cover.

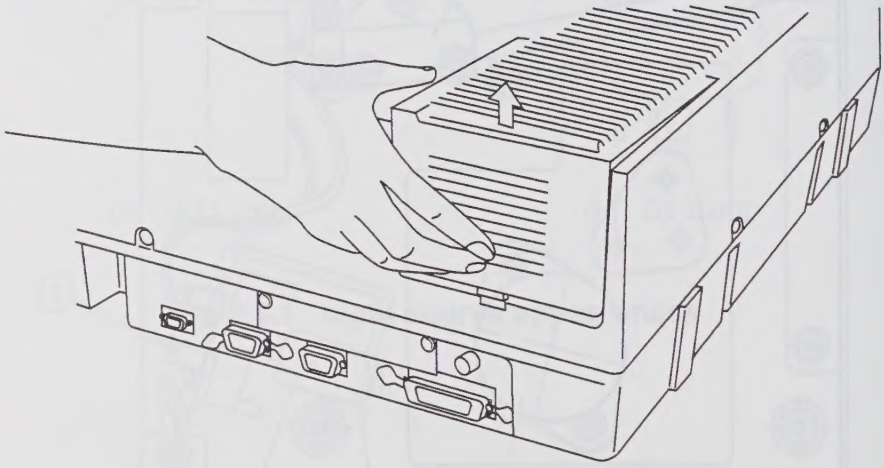

Fig 3.4.4 Removing the light source cover

(3) Slowly extract the D2 lamp upward and remove it from its socket.

(4) Insert the new D2 lamp in the socket. Check at that time to see that it is well seated.

(5) Turn ON the power.

(6) Press the [GOTO WL] key and set the wavelength to 250nm.

(7) Check to see that the beams is shining into the monochromator entrance slit properly. The spectrophotometer will automatically make horizontal adjustments (The center of the beam does not necessarily have to match the center of the slit.) If the lamp has not been replaced properly, the beam may not match with the entrance slit in the vertical direction.

(8) Close the light source compartment cover.

- **Replacing the WI lamp**

(1) Press on the parts indicated by the arrows in Fig.3.4.3 on the sides of the light source cover, lift the cover up and release the "catch".

(2) Next, Pull the light source cover in the direction of the arrow in Fig.3.4.4 to remove the light source cover.

(3) Remove the WI lamp retainer spring from the end of the top of the WI lamp. Since there is fear of touching the D2 lamp with your hand at this time, either cover the D2 lamp with a clean piece of paper or cloth or remove the D2 lamp before performing this operation, (Refer to "Replacing D2 Lamp" for the procedure of removing the D2 lamp.)

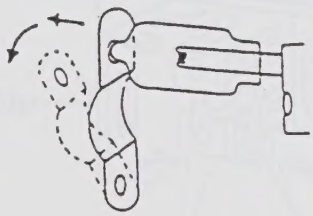

Fig.3.4.5 Removing the WI lamp

(4) Extract the WI lamp from its socket.

(5) Please wear gloves so as not to contaminate the beam port of the WI lamp. Then , holding the new WI lamp so as to grasp it from the top and bottom, insert it into its socket.

(6) Insert the protrusion at the top of the WI lamp into the hole in the retainer sprint so that the WI lamp does not fall out.

(7) Reset the previously removed D2 lamp. Refer to "Replacing D2 Lamp" for the method of resetting the D2 lamp.

(8) Turn ON the power.

(9) Check to see that the beam is shining into the monochromator entrance slit properly. The spectrophotometer will automatically make horizontal adjustments. (The center of the beam does not necessarily have to match the center of the slit.) If the lamp has not been replaced properly, the beam may not match with the entrance slit in the vertical direction.

(10) Close the light source compartment cover.

3. 5 Replacing Fuse

Warning **ELECTRICAL SHOCK**

There is a possibility of electric shock. Before replacing the fuse, turn OFF the power and remove the power cord.

When the fuse burns out, replace it by the following procedure. Use only the specified fuse.

(1) Turn OFF the power.

(2) Remove the power cord from the power connector.

(3) Use a standard screwdriver to open the cover on the fuse holder, as shown in Fig. 3.5.1.

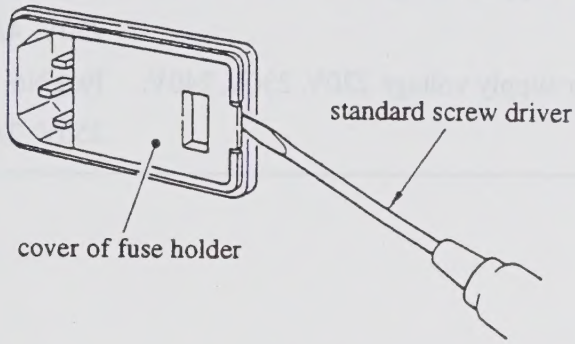

Fig. 3.5.1 Opening the fuse holder cover

(4) Pull out the fuse holder, as shown in Fig. 3.5.2

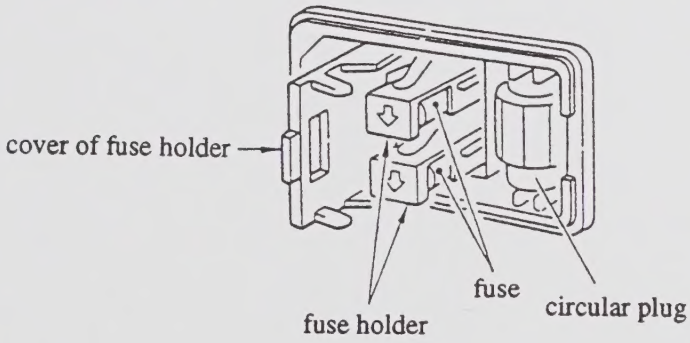

Fig. 3.5.2 Interior of fuse holder

(5) Remove the old fuse from the fuse holder and replace it with the new fuse. Of the two fuses, you need only replace the burned out fuse. (If both fuses are burned out, replace both fuses.)

(6) After replacing the fuse, push the fuse holder in so that the arrow on the fuse holder points down.

(7) Close the fuse holder cover until you hear its snap shut.

Note After replacing the fuse, turn ON the power switch and check to see that the unit initializes properly.

Caution Pay attention to the rating and type of the fuse.
Be sure to replace with the fuse of the specified rating and type.

Power supply voltage 100V, 120V:	Part No. 072-01652-22 250V 4A T (5×20)
Power supply voltage 220V, 230V, 240V:	Part No. 072-01652-19 250V 2A T (5×20)

3. 6 Cleaning the Unit

The spectrophotometer case and sample compartment should be kept clean. Cleaning should be done with a soft cloth slightly dampened with water or a solution of water and a mild detergent. Do not use an excessively damp cloth that liquid can drip into the spectrophotometer.

Caution	Be very careful not to spill water, organic solvent, etc. on the instrument. Spilling liquid on the instrument can cause electric shock, fire, damage or malfunction of the instrument.

3.7 Precaution During Transportation of the Unit

Caution This unit weighs about 18kg. When moving this unit, it must be lifted by two persons firmly holding at the positions shown in the diagram.

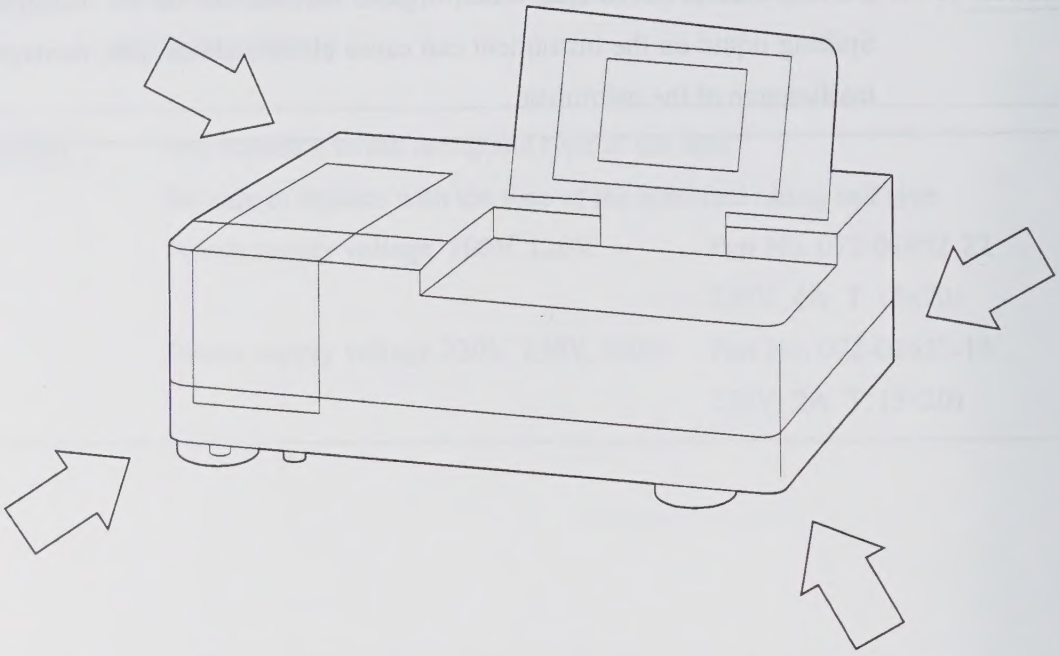

Fig. 3.7.1

3. 8 List of Consumable Part, Spare Parts

Part Name	Model	Part No.
Tungsten iodide lamp	64440	062-65004-06
Deuterium lamp	L-6380	062-65055-05
Cover, sample compartment		206-80401
Cell holder assembly		202-30215
Fuse (for 100, 120V)	250V 4A T (5×20)	072-01652-22
Fuse (for 220, 230, 240V)	250V 2A T (5×20)	072-01652-19
AC power cord (for 100, 120V)		071-60814-01
AC power cord (for 220, 230, 240V)		071-60814-05
Ground adapter (for 100, 120V)		071-60803-01

Chapter 4 Specifications

CONTENTS

4.1 Hardware Specifications 4-2
4.2 Software Specifications 4-4

4.1 Hardware Specifications

Measurement Wavelength Range	190~1100nm
Spectral Band Width (Resolution)	2nm
Wavelength Display	0.1nm units
Wavelength Setting	0.1nm units (1nm units in scan)
Wavelength Accuracy	±0.5nm On-board automatic wavelength calibration mechanism
Wavelength Repeatability	±0.1nm
Wavelength Scanning Speeds	GOTO WL command : approx. 6000nm/min Very Fast : approx. 3200nm/min Fast : approx. 2200nm/min Medium : approx. 370nm/min Slow : approx. 260nm/min Very slow : approx. 160nm/min
Sampling Interval	1.0nm (2.0mm) : 910nm≧λ range>500nm 0.5nm (1.0mm) : 500nm≧λ range>200nm 0.2nm (0.5mm) : 200nm≧λ range>100nm 1.0nm (2.0mm) : 100nm≧λ range The sampling interval inside ( ) indicates the one at "Very Fast" wavelength scanning speed (Where in,"λ range" is the difference between the measurement start wavelength and the measurement end wavelength.)
Light Source Switching	Automatic switching with wavelength range. Can be set anywhere in range from 295.0nm to 364.0nm (340.8nm is recommended)
Stray Light	Less than 0.05%
Photometric System	Double beam optics
Photometric Range	Absorbance : –0.5~3.999Abs (when uncorrected baseline curve is within 0.5Abs) Transmittance : 0~300%
Recording Range	Absorbance : –3.99~3.99Abs Transmittance : –399~399%
Photometric Accuracy	±0.004Abs (at 1.0Abs) ±0.002Abs (at 0.5Abs)
Photometric repeatability	±0.002Abs (at 1.0Abs) ±0.001Abs (at 0.5Abs)
Auto Zero Function	[AUTO ZERO] key enables one-touch setting
Baseline Stability	±0.001Abs/h
Baseline Flatness	±0.002Abs

Noise Level	0.002Abs
Baseline Correction	Automatic correction using computer memory 2-level baseline correction (High-precision instrument baseline correction function)
Light Source	50W halogen lamp (long-life 2000 hour), Deuterium lamp (socket-type), On-board automatic light source positioning mechanism
Monochromator	Uses aberration-correcting concave blazed holographic grating
Detector	Silicon photodiode
LCD	Backlit (320×240 dot), Adjustable contrast
Sample Compartment	Interior dimensions 110×230×105 (mm) (W×D×H) (Partial depth 155mm) Distance between beams 100mm Removable type 2-screw attachment Beam dimensions 1×10mm (W×H) (at center of sample compartment)
Power Supply	100, 120, 220, 230, 240V 50/60Hz 160VA
Dimensions	550×470×380 (200 at closing LCD unit) (mm) (W×D×H)
Weight	18kg
Ambient Temperature	Room temperature 15~35°C
Ambient Humidity	Humidity 45~80% (less than 70% at temperature higher than 30°C)

4. 2 Software Specifications

Photometric	(1) Fixed-wavelength measurement Up to 16 (max) cells can be measured (Possible to use multicell, cps, 8/16 micro-multicell) (2) Quantitation by K-factor method (3) Photometric modes : T%, Abs (4) Save/Load table data function Automatic data print function
Spectrum	(1) Photometric modes : Abs, T%, E Wavelength range : 190~1100nm Scan speeds : Very Fast, Fast, Medium, Slow, Very slow Vertical axis recording range : Abs:–3.99~3.99 T%, E : –399~399 Scan repetitions : 1~99 Recording method : Overlay/Sequential selectable (2) Spectrum Data Processing Functions Reduce/Expand [zoom] Display data with cursor Save/Load data (Units: 6, Data packs: 27) (3) Spectrum data can be transmitted externally through RS-232C port (4) Output function of spectral data to an analog output interface. (5) Data processing mode function
Quantitation	(1) Measurement methods: One-wavelength quantitation, Two-wavelength/Three-wavelength quantitation, Quantitation by derivative (1~4 order) calculation (2) Quantitation methods: Automatically calculate concentration by K-factor method Automatically calculate concentration by one-point calibration curve method Multi-point calibration curve (1-3 order regression calibration curve) (3) Measurement parameters: Quantitation by repeat measurement (1~9 times) and taking the average measurement value Derivative quantitation order (1~4) Number of standard samples for multi-point calibration curve (2~10) Order of calibration curve (1~3) Select pass-through-origin conditions (4) Save/Load table data function (5) Automatic data print function
Kinetics	(1) One-wavelength kinetics Measurement time (1~6500 sec (min)) Data processing mode function

Kinetics	(2) Multi-kinetics Correspond to multicell, cps, 8/16 micro-multicell (3) Two-wavelength kinetics (4) Rate-measurement (5) Save/Load time course data function (6) Time course data can be transmitted externally through RS-232C port
Time Scan	(1) One-cell measurement Data processing mode function (2) Multicell measurement Correspond to multicell, cps, 8/16 micro-multicell (3) Save/Load time course data function (4) Time course data can be transmitted externally through RS-232C port
Multi-Component Analysis	(1) Up to 8 components (2) Pure and mixed samples of each constituent component can be used as standard samples (3) Besides measurement parameters, standard sample data can also be filed (4) Equally spaced wavelengths or random wavelengths can be selected for measurement wavelengths (5) Quantitation can be done by calling up spectra
Data processing	Data processing of spectrum data and time course data (1) Add, subtract, multiply, divide between two spectral data (2) Add, subtract, multiply, divide between two spectral data and constants (3) Derivative (1, 2, 3, 4 order), and Smoothing (4) Integration (Area calculation) (5) Pick peak (6) Pick point (7) Display curve (8) Read cursor

Chapter 5 Optional Accessories

CONTENTS

5.1 Printer 5-2
5.2 Multi-cell, 8/16 Micro-Multicell Sample Compartment 5-5
5.3 CPS-240 5-8
5.4 Sipper 5-10
5.5 Syringe Sipper 5-13
5.6 Removing the & Securing "Cover, Sample Compartment" 5-15
5.7 IC Card 5-18
5.8 List of Optional Cells 5-21

5.1 Printer

Note Refer to HCP-1A User's Manual for detailed operation of the HCP-1A.

The HCP-1A (P/N 206-81009) thermal printer is available for use as the output device the UV-1601. Use this to output hard copies of the screen image or for numeric output, such as photometric values, etc.

Fig. 5.1.1 Thermal printer

5.1.1 Installation Procedure

Table 5.1.1 Printer Installation Procedure

Step	Operation, Monitor Display	Key Operation
1	Return to the Top Menu	Press the [RETURN] key until the screen changes. Then press the [MODE] key.
2	Mode 550.0nm 0.000A 1.Photometric 2.Spectrum 3.Quantitation 4.Kinetics 5.Time Scan 6.Multi-Component 7.Optional Program Pack 8.Utilities Input item No. Params IC Card PC Ctrl	

continued.

Step	Operation, Monitor Display	Key Operation
3	Select "8. Utilities"	[8]
4	Utilities 1.Start program : Standard menu 2.Data display : 4 3.S/R exchange : Standard 4.Light source : 340.8 5.Printer : HCP 6.Clock set : 95/10/06 09:24:13 7.D2 lamp off time: 60min 8.Beep : ON 9.Maintenance Input item No.	
5	Select "5. Printer"	[5]
6	Utilities 1.Start program : Standard menu 2.Data display : 4 Printer HCP DPU ESC/P 9 ESC/P 24 3 : Standard 4 : 340.8 5 : HCP 6 : 95/10/06 09:26:45 7.D2 lamp off time: 60min 8.Beep : ON 9.Maintenance ◀ ▶ :Cursor key	
7	Select "HCP"	[◀] or [▶]

5.1.2 Operating Procedure

(1) Hard copy of screen : A hard copy of the screen will be printed when you press the [PRINT] key.

(2) Print using function key : When the function keys are assigned a [PRINT] function as in modes in which the measurement results are recorded in table format, as in Photometrics, all of the table data will be printed.

(3) Print numeric data for each measurement : When the measurement results are obtained in the form of numeric values, as in Photometrics, the measurement results will be automatically printed if the printer is simply connected to the unit.

(4) To feed paper : Press the [ON LINE] key on the printer to turn the on line display OFF. Then press the [FEED] key.
After using this, press the [ON LINE] key again to turn the line display back ON.

A multi-cell Sample Compartment, which can measure max 16 cells at once, is available as an option.

Multi-cell Holder (6 cells) (P/N 206-69160)

Micro Multi-cell Holder (P/N 206-84856-91)*

* not include 8-position or 16-position Micro Multi-cell

5.2.1 Installation Procedure

1) In case of Multi-cell

(1) Turn OFF the UV-1601 power switch.

(2) Loosen the knurled screws (2) at the front edge of the sample compartment of the unit.

(3) Lift the entire sample compartment up and pull out.

(4) Remove the slide panel from the multi-cell holder. (only Multicell)

(5) Insert the multi-cell holder connector into the socket in the back wall of the sample compartment.

(6) Firmly insert the multi-cell holder into the front of the sample compartment so that the lead edge of the multi-cell holder engages with the positioning pin at the back of the sample compartment mounting area.

(7) Press down on the multi-cell holder from the top so that the positioning on the front-bottom of the multi-cell holder inserts into the sample compartment positioning aperture.

(8) Tighten the knurled screws (2) at the front edge of the sample compartment.

(9) Mount the slide panel that was removed. (only Multicell)

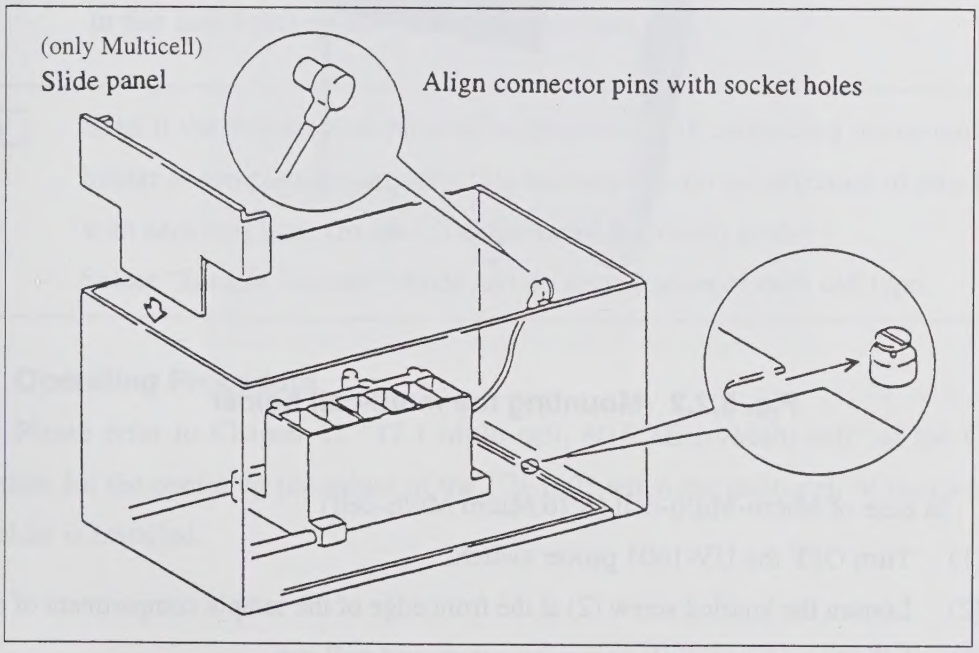

Fig. 5.2.1 Mounting the multi-cell holder

(10) Turn ON the unit power switch.

(11) Check to see that the initialization process is properly completed.

(12) Press the [GOTO WL] key and set the wavelength to "530nm".

(13) Using a white piece of paper (a business card or the like), check to see that the center of the beam matches with the center of the cell position at the position of the front-most cell in the multi-cell holder. It is abnormal for the light to strike the cell holder without passing through the cell holder hole. In this case contact your Service Representative.

Note	Insted of the slide panel, "Cover, Sample Compartment" can be attached to the Multi-cell Sample Compartment. Please refer to "5.5 Removing & Securing "Cover, Sample Compartment".

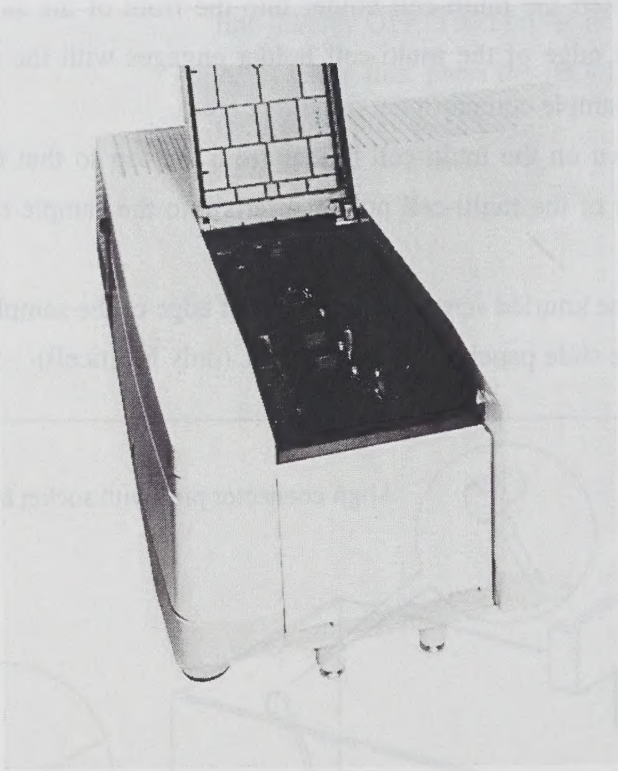

Fig. 5.2.2 Mounting the multi-cell holder

2) In case of Micro-Multi-cell (8/16 Micro Multi-cell)

(1) Turn OFF the UV-1601 power switch.

(2) Loosen the knurled screw (2) at the front edge of the sample compartment of the unit.

(3) Life the entive sample compartment up and pull out.

(4) Insert the micro-multi-cell holder connector into the socket in the back wall of the sample compartment.

(5) Firmly insert the micro-multi-cell holder into the front of the sample compartment so that the lead edge of the micro-multi-cell holder engages with the positioning pin at the back of the sample compartment mounting area.

(6) Press down on the micro-multi-cell holder from the top so that the positioning on the front-bottom of the micro-multi-cell holder inserts into the sample compartment positioning aperture.

(7) Tighten the knurled screws (2) at the front edge of the sample compartment.

(8) Turn ON the unit power switch with confirming the cell holder not be mounted micro multi-cell (8/16 cells).

(9) Check to see that the initialzation process is properly completed.

(10) Mount the micro-cell (8/16 cells).

(11) Select "Sample Control" mode and do initialization with each cell type.

(12) Press the 'GOTO WL' key and set the wavelength to "530mm" after checking the initialization of attachment is completed.

(13) Using a white piece of paper (a business card or the like), check to see that the center of the beam almost matches with the center of cell position at the front-most cell in the micro-multi-cell holder.

It is abnormal for the light to strike the side wall of cell without passing through the cell hole.

In this case contact your Service Representative.

Note Even if the initialization process is completed with connecting micro-multi-cell holder to sample compartment, it is necessary to do initialization of attachment with each cell type. (In case you use micro-multi-cell holder.)
Select "Sample Controll" mode and do initialization of each cell type.

5.2.2 Operating Procedure

Please refer to Chapter 12 "12.1 Multi-cell, 8/16 Micro-Multi-cell" of the Operation Guide for the operating procedure of the UV-1601 when the multi-cell or micro-multi-cell holder is installed.

5.3 CPS-240

Note Refer to CPS-240 User's Manual for detailed operation of the CPS-240.

The CPS-240A thermoelectrically temperature controlled cell positioner is an temperature controlled cell holder for maintaining the temperature of 6 cells at a constant temperature. The CPS240A is for use with 10mm rectangular cells, but a flow cell type, the CPS-240B, is also available. The UV-1601 screen displays and this operating manual are based on the typical CPS-240.

CPS-240 Main Specifications

Possible number of cells	:	Sample side 6 (w/ temperature control) Reference side 1 (w/o temperature control)
Temperature setting range	:	16~60°C
Temperature accuracy	:	±0.5°C
Temperature control precision	:	±0.1
Ambient operating temperature	:	15~35°C

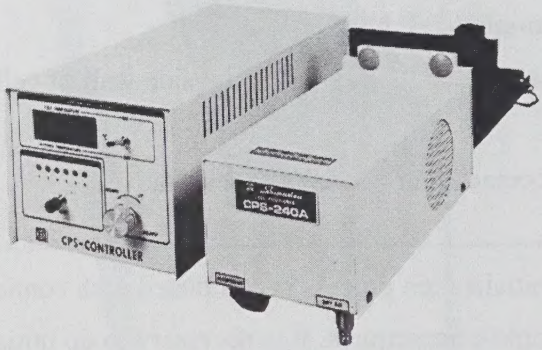

Fig. 5.3.1 CPS-240

5.3.1 Installation Procedure

(1) Turn OFF the UV-1601 power switch.

(2) Loosen the knurled screws (2) at the front edge of the sample compartment.

(3) Lift the entire sample compartment up and pull out.

(4) Insert the lead edge of the base of the CPS-240 into the positioning pin at the back of the sample compartment mounting area on the spectrometer.

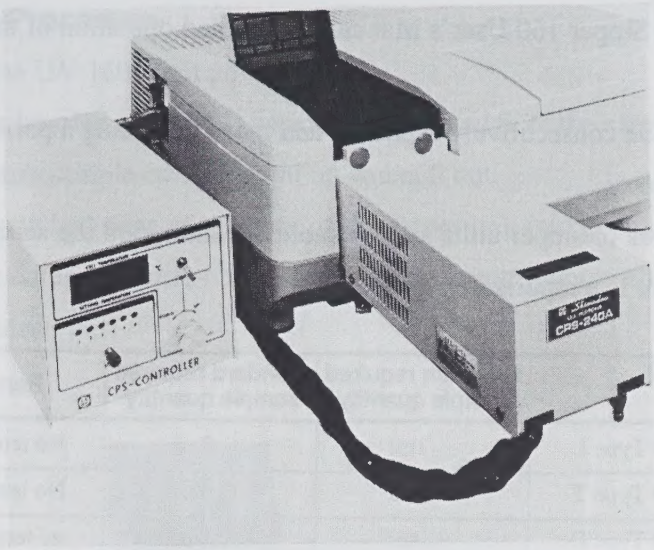

Fig. 5.3.2 Installing the CPS-240

(5) Press down on the CPS-240 from the top so that the sample compartment positioning pin on the front-bottom of the CPS-240 inserts into the sample compartment positioning hole on the unit.

(6) Tighten the knurled screws (2) beneath the front of the sample compartment.

(7) Connect the CPS-240 with the spectrophotometer according to the Fig.5.3.3

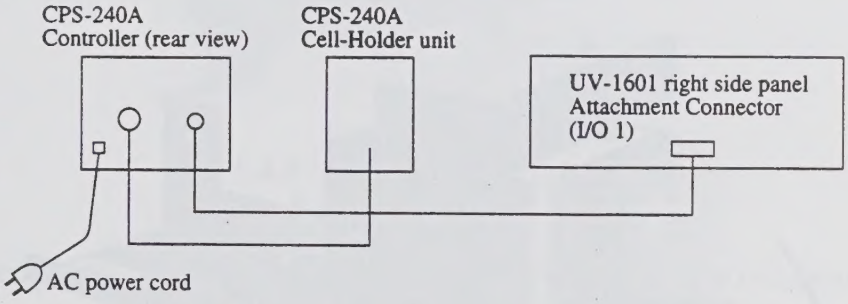

Fig.5.3.3 Connecting the CPS-240 cable

5.3.2 Operating Procedure

Please refer to Chapter 12 "12.1 Multi-cell, 8/16 Micro-Multi-cell" of the Operation Guide for the operating method of the UV-1601 when the CPS-240 is installed.

However, set <1. Sample module> in the Sample Control screen for each measurement mode to "4. CPS-240". Also set the temperature for the CPS-240 with the CPS-240 Controller.

Please refer to the CPS-240 Operating Manual for detailed operating instructions for the CPS-240.

5. 4 Sipper

Note Refer to Sipper 160 User's Manual for detailed operation of the sipper unit.

Liquid samples can be consecutively aspirated and measured using a peristaltic pump which is driven by a stepping motor.

The following 5 types of sipper units are available depending on the sample quantity required and whether of not there is temperature regulator.

	Minimum required sample quantity	Standard required sample quantity	Remarks
Sipper 160 Type L	1m*l*	2m*l*	No temp reg
Sipper 160 Type T	0.8m*l*	1.5m*l*	No temp reg
Sipper 160 Type C	1.0m*l*	2.5m*l*	w/ temp reg
Sipper 160 Type U	0.3m*l*	0.5m*l*	No temp reg
TSU-2200	0.8m*l*	1.5m*l*	w/ temp reg

Sipper unit has the following two purposes.

(1) Automatic aspiration and measurement of manually loaded samples.

(2) Fully automatic measurement when linked with an auto-sample changer.

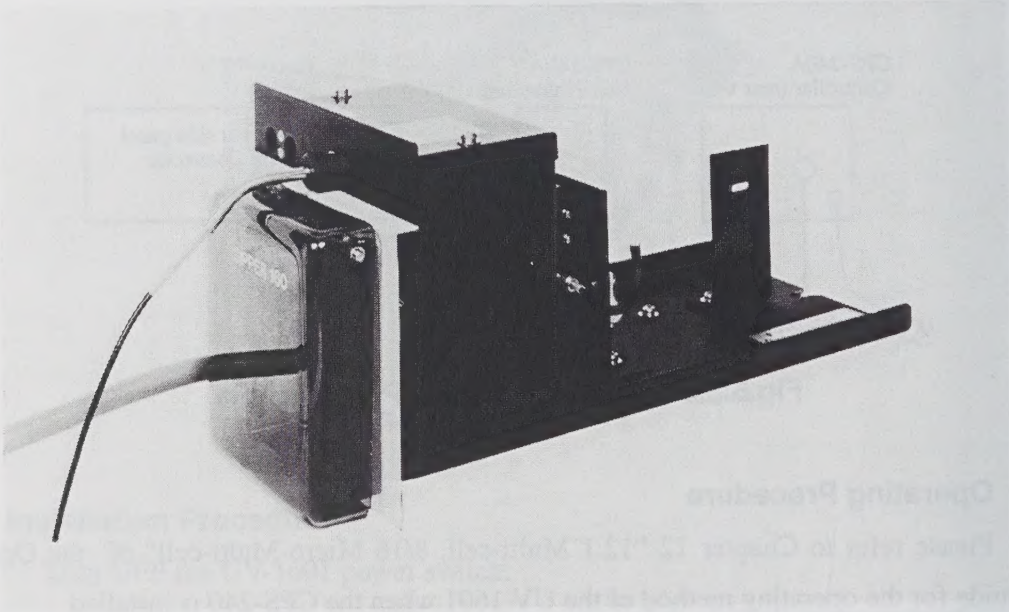

Fig. 5.4.1 Sipper 160

5.4.1 Installation Procedure

(1) Turn Off the UV-1601 unit power switch.

(2) Loosen the knurled screws (2) beneath the front edge of the sample compartment.

(3) Lift the entire sample compartment up and pull out.

(4) Insert the notched edge of the base of the sipper unit into positioning pin at the back of the sample compartment mounting area on the spectrophotometer, and slide the front down into place.

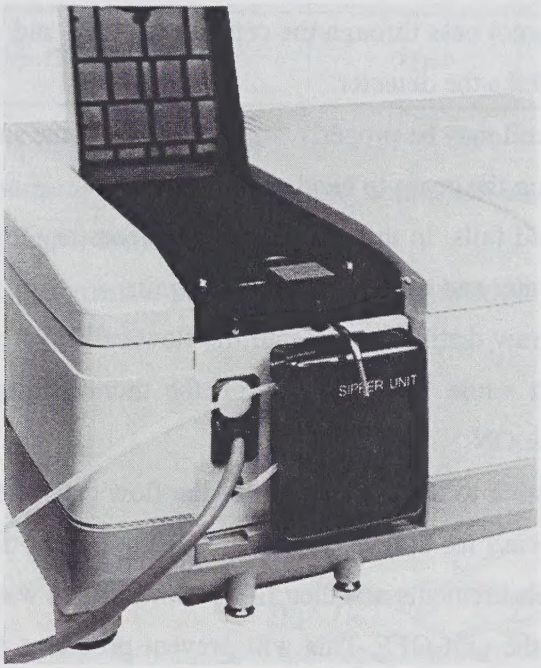

Fig. 5.4.2 Installing the Sipper 160

(5) Press down on the sipper unit from the top so that the sample compartment positioning pin on the front-bottom of the sipper unit fits into the positioning hole on the unit.

(6) Tighten the knurled screws (2) below the sample compartment of the unit.

(7) Securely connect the sipper unit cable to the attachment connector (I/O2) on the right side of the spectrophotometer.

5.4.2 Operating Procedure

Please refer to Chapter 12 "12.2 Sipper" of the Operation Guide for the operating Procedure of the UV-1601 when the sipper is installed.

Please refer to the Sipper 160 Operating Manual for detailed operating instructions for the sipper unit.

Note Failure of the instrument to initialize properly may be attributable to one of the following.

1) The flow cell is not properly mounted when using a sipper unit, and the beam does not pass through the center of the cell and consequently does not properly strike the detector.
2) The flow cell may be properly set, but there is some sample remaining in the cell, causing the beam to bend.

   If initialized fails, In this case, it will be necessary to fill the flow cell with distilled water and turn the power ON again.

   You can draw distilled water into the flow cell by pressing the lever on the sipper unit while "UV-1601" is on the monitor display after turning the power back ON.

   Dust can stick to the inside walls of the flow cell when the flow cell is dry, making it easy for bubbles to form. Therefore, rinse the flow cell after completing measurements and then fill it with distilled water before you turn the power of the unit OFF. This will prevent problems from occurring during initialization.

5.5 Syringe Sipper

Note Refer to Syringe Sipper User's Manual for detailed operation of the syringe sipper.

Liquid samples can be consecutively aspirated and measured using a syringe-pump which is driven by a stepping motor.

The following 2 types of sipper units are availabel.

	Minimum required sample quantity	Standard required sample quantity	Remarks
Sringe Sipper Type U	0.4m*l*	0.5m*l*	Cell capacity :33µl
Sringe Sipper Type CU	0.4m*l*	0.5m*l*	Water-Jackted of Type U

To ensure complete chemical resistance (for strong acid/alkali and organic solvents), the tubing and values of Syringe Sipper are made of Teflon.

And Full automatic measurement is possible by linking with ASC-5 (Auto sample changer).

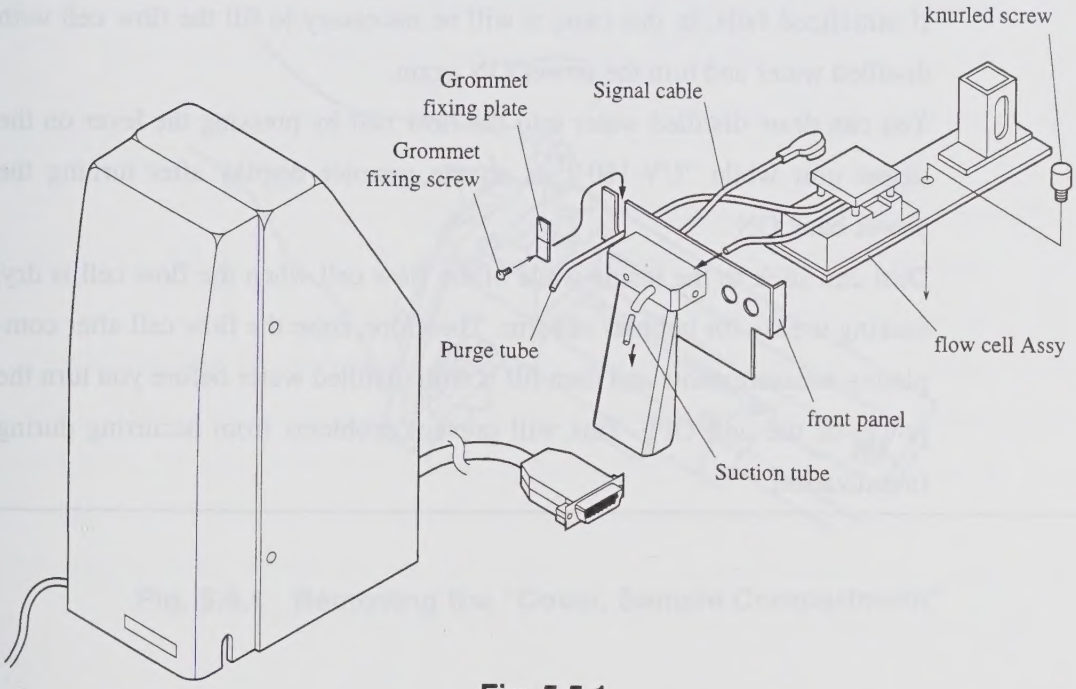

Fig. 5.5.1

5.5.1 Installation Procedure

Please refer to Chapter 4 "4.3 Installation" of Syringe Sipper's Manual about installing to UV-1601.

5.5.2 Operating Procedure

Please refer to Chapter 12 "12.4 Syringe Sipper" of the Operation Guide or Chapter 5, 6 "Operating Procedure" of Syringe Sipper's Manual for the operating procedure of the UV-1601 when the syringe sipper is installed.

Note

Failure of the instrument to initialize properly may be attributable to one of the following.

1) The flow cell is not properly mounted when using a sipper unit, and the beam does not pass through the center of the cell and consequently does not properly strike the detector.
2) The flow cell may be properly set, but there is some sample remaining in the cell, causing the beam to bend.

   If initialized fails, In this case, it will be necessary to fill the flow cell with distilled water and turn the power ON again.

   You can draw distilled water into the flow cell by pressing the lever on the sipper unit while "UV-1601" is on the monitor display after turning the power back ON.

   Dust can stick to the inside walls of the flow cell when the flow cell is dry, making it easy for bubbles to form. Therefore, rinse the flow cell after completing measurements and then fill it with distilled water before you turn the power of the unit OFF. This will prevent problems from occurring during initialization.

5. 6 Removing & Securing "Cover, Sample Compartment"

There are optional accessories, such as the constant temperature single cell holder (P/N 202-30858-04) and 10 mm micro flow cell (P/N 204-06222), which are mounted in place of the sample compartment's (standard) cell holder. These may also have tubing fitted to their front panel to work with the circulating water bath.

In order to mount these front panels which are equipped with tubing, it is necessary to remove the "Cover, Sample Compartment" from the standard sample compartment unit. In this case, please follow the following procedure.

5.6.1 Removing the "Cover, Sample Compartment"

(1) Turn OFF the UV-1601 unit power switch.

(2) Loosen the knurled screws (2) beneath the sample compartment on the unit.

(3) Lift the entire sample compartment up and pull out.

(4) Turn the sample compartment unit upside-down and, as shown is Fig. 5.6.1, forcibly twist the "Cover, Sample Compartment" in the direction of arrows with your thumb to remove the cover.

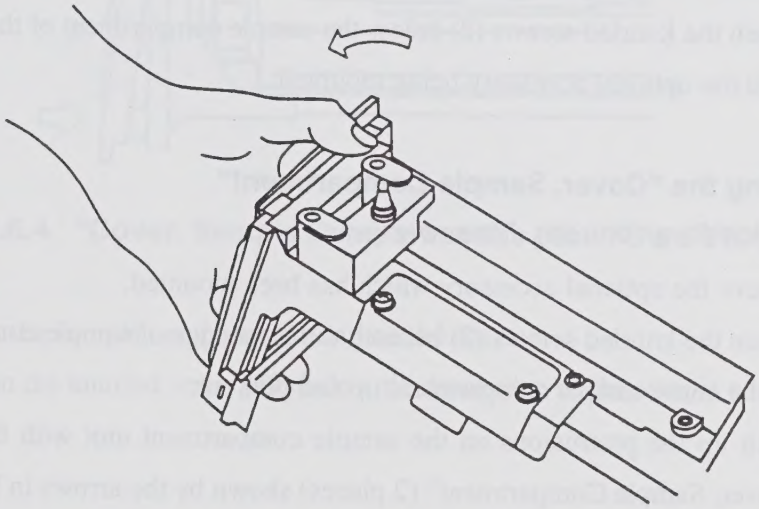

Fig. 5.6.1 Removing the "Cover, Sample Compartment"

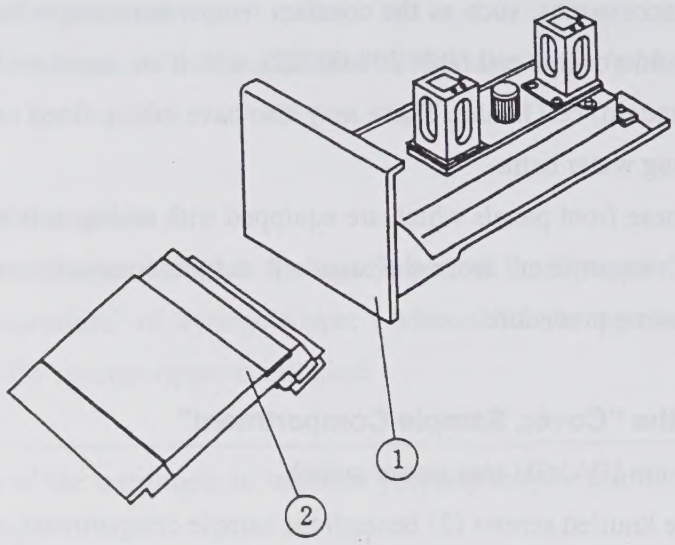

(1) Sample Compartment unit

(2) "Cover, Sample Compartment"

Fig. 5.6.2 The "Cover, Sample Compartment", removed

(5) Mount the Sample Compartment on the main unit.

(6) Tighten the knurled screws (2) below the sample compartment of the unit.

(7) Install the optional accessory being mounted.

5.6.2 Securing the "Cover, Sample Compartment"

(1) Turn OFF the UV-1601 unit power switch.

(2) Remove the optional accessory which has been mounted.

(3) Loosen the knurled screws (2) beneath the front edge of sample compartment.

(4) Lift the entire sample compartment up and pull out.

(5) Match up the protrusions on the sample compartment unit with the protrusions on the "Cover, Sample Compartment" (2 places) shown by the arrows in Fig. 5.6.3.

(6) Press the "Cover, Sample Compartment" against the sample compartment unit, in the direction of the arrows in Fig. 5.6.4, until it snaps into place.

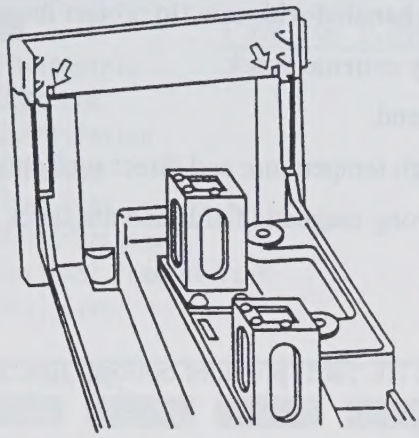

Fig. 5.6.3 Mounting the "Cover, Sample Compartment"

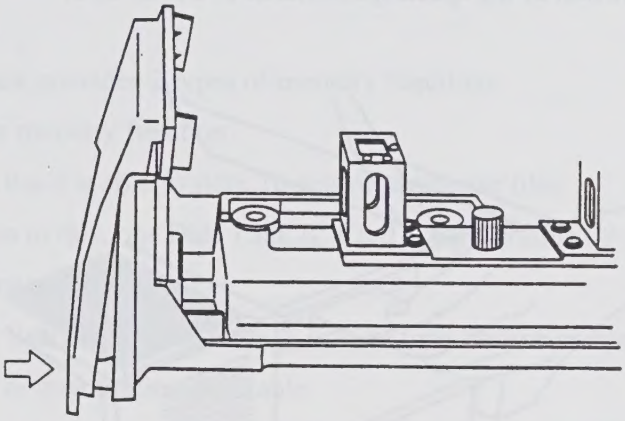

Fig. 5.6.4 "Cover, Sample Compartment", mounting direction

(7) Mount the sample compartment unit on the unit.

(8) Tighten the knurled screws (2) below the front edge of the sample compartment.

5.7 IC Card

Note IC card should be handled with care (to protect the program or data)

1. Avoid phsically extreme shock.
2. Do not try to bend.
3. Keep out of high temperature and direct sunlight.
4. Keep out of strong magnetic fields and the shock of static electricity.

5.7.1 Program Pack

Optional program Pack (IC card) provides optional functions to UV-1601.

- Operating procedure

(1) Firmly insert the Program Pack into the IC card slot of the right side of the spectrophotometer. (shown in Fig. 5.7.1) The Program Pack can be inserted/removed whenever the power switch of the spectrophotometer is ON or OFF.

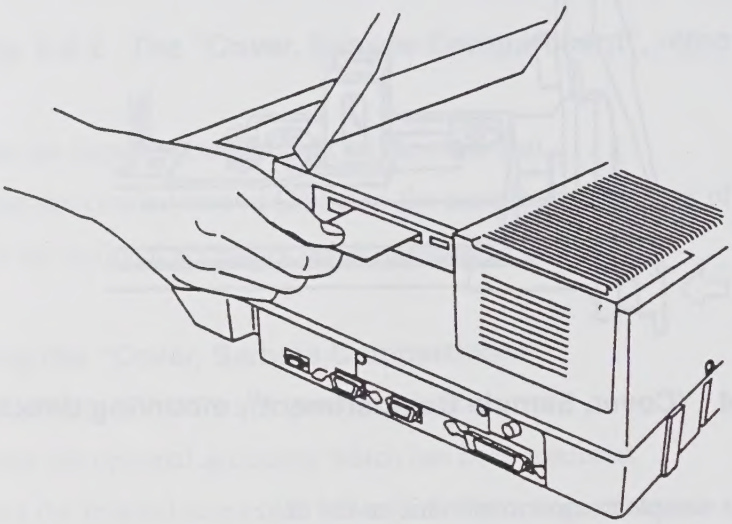

Fig.5.7.1 Inserting the IC card

(2) Select "7. Optional Program Pack" on the Top Menu. (shown in Fig. 5.7.2)

The optional program inserted is automatically loaded to the spectrophotometer and its menu (or parameter setting) screen is displayed.

Please refer to Chapter 9 "Optional Program Pack" of the Operating Manual for the operating procedure of the UV-1601 with the Program Pack.

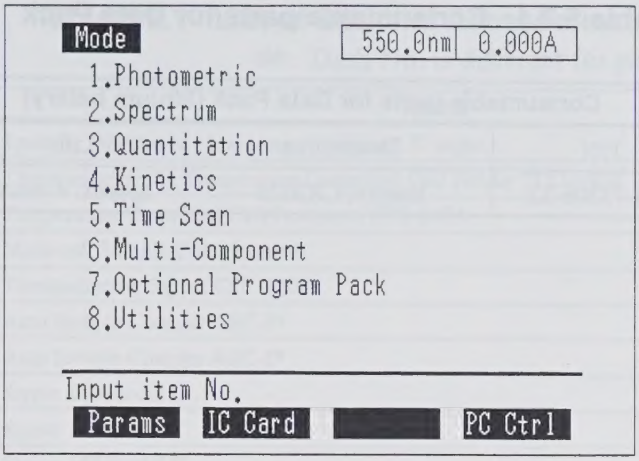

Fig.5.7.2 Top Menu Screen

5.7.2 Data Pack

The Data Pack provides 2 types of memory functions.

(1) Parameter memory function

UV-1601 itself is able to store 16 sets of parameter files.

In addition to this, one Data Pack IC Card is able to store 79 sets

(2) Data memory function

UV-1601 itself is able to store 5 sets of time course or spectral data curves, or of photometric or quantitation data table.

In addition to this, one Data Pack IC card is able to store 27 sets.

- Operating procedure

(1) Firmly insert the Data Pack into the IC card slot of the right side of the spectrophotometer. (shown in Fig. 5.7.1) The Data Pack can be inserted/removed whenever the power switch of the spectrophotometer is ON or OFF. The stored parameters and data in the Data Pack are kept after removing from the spectrophotometer, since the Data Pack has a own battery inside.

Note Removing Data Pack from UV-1601

If the data Pack is removed from the UV-1601 while data is being written to or read from the Data Pack, data stored in the Data Pack may be destroyed. Since writing to or reading from the Data Pack is accomplished relatively quickly, perform some key operation and then allow about 2~3 seconds before removing the Data Pack from the UV-1601.

Table 5.7.1 Consumable parts for Data Pack

Consumable parts for Data Pack (lithium batery)		
P/N	Description	Life
074-73306-22	battery, CR2025	approx. 4 years

5. 8 List of Optional Accessories

Table 5.8.1 List of Optional Accessories

: Dash No. is different for power supplying voltage.

Part No.	Nama
206-14046	Specular reflectance Measuring Attachment 5° angle
204-05557-##	Thermoelectrically Temperature Controlled Cell Holder TCC-240A
204-05837-##	Temperature Controlled Cell Positioner CPS-240A
206-69160	Multi-cell Sample Compartment
206-65108-##	Thermoelectric Sipper TSU-2200*
200-92504	Auto Sample Changer ASC-3*
204-09100-##	Auto Sample Changer ASC-5*
204-08270-01	Sipper 160 model L
204-08270-02	Sipper 160 model T
204-08270-03	Sipper 160 model C
204-08270-04	Sipper 160 model U
204-06222-01	Micro Flow Cell 5mm
204-06222	Micro Flow Cell 10mm
200-65022	Constant-temperature water circulating device TB-85*
204-29230	Sample Waste Unit SWA-2*
202-30858-04	Constant temperature Cell Holder
204-27206-02	Constant temperature four Cell Holder
204-23118-01	Long-Path Rectangular Cell Holder
204-27208	Four-cell, Rectangular Long Path Cell Holder
202-06216-02	Cylindrical Cell Holder
204-06896	Micro Cell Holder with mask
204-00850-01	Four-cell Sample Compartment Unit with Holder
204-27588-03	Front Panel with Holes for Sample Compartment
204-51774	Gel Scanner GSC-3A*
204-58909	Film Holder
206-14334	Super-Micro Cell Holder
206-69746	Capillary Cell Set
206-12852	Flow-Thru Cell for liquid chromatography (with holder)
204-04757	Analog Output Interface
200-91513	Recorder U135-MU*
206-81350	Printer DPU-411*
206-81009-##	Thermal Printer, HCP-1A*
200-86381	RS-232C Cable
200-86408	RS-232C Cable IBM/AX
206-80703-02	Photometric (multi-wavelength) program pack
206-80704-02	Time course (multi-wavelength) program pack
206-80705-02	Plotter program pack
206-60570-04	PC software for UV-1601
206-82761	Kinetics software KIN-UVPC E
206-82763	Photometric software PHM-UVPC E
206-84856-91	Micro Multi-cell Holder
206-88039-91	Syringe Sipper U Type
206-88039-92	Syringe Sipper CU Type

* For Europe :

These accessories, shown as bellow, DO NOT comply with the requirements of the EMC Directive 89/336/EEC, the Directive 93/68/EEC amending Directive 89/336/EEC.

Table 5.8.2 List of Optional Cells

Name		shape	Quartz (S cell)	Glass (G cell)	Q'ty	Special holder
Square cell,optical length 10mm		A	200-3442	200-34565	1	Not required
Square cell, matching type		A	201-98716	200-98746	2/sets	Not required
Sealed-type square cell, optical length 10mm		B	200-34444	200-34444-01	1	Not required
Semi microcell, optical length 10mm required sample volume 1.0mL or more		C	200-66501	200-66501-01	1	Not required
Semi microcell, optical length 10mm required sample volume 1.0mL or more		D	200-66551		1	Not required
Super-micro black sell, with 10mm optical path and required sample volume of 50μl more		K	200-66578-11		1	Super-micro cell holder (206-14334) req'd
Micro black sell, with 10mm optical path and required sample volume of 50μl more		L	200-66578-12		1	Super-micro cell holder (206-14334) req'd
Cylindrical cell (OD 25μ") (ID 22μ")	L (Optical.length) = 10mm	E	200-34448 (quartz window)	200-34448-01 (glass window)	1	Cylindrical cell holder (204-06216) req'd
	L = 20mm		200-34472 (quartz window)	200-34472-01 (glass window)	1	
	L = 50mm	F	200-34447-01 (quartz window)	200-34473-03 (glass window)	1	
	L = 100mm		200-34473-02 (quartz window)	200-34473-04 (glass window)	1	
Square long absorption cell	L = 20mm	G	200-34446	200-34446-01	1	Long-path rectangular cell holder (204-23118-01) req'd
	L = 50mm		200-34944	200-34944-01	1	
	L = 100mm		200-34676	200-34676-01	1	
Short optical length cell	L = 1mm	H	200-34660-01	200-34662-01	1	Short optical length cell spacer req'd
	L = 2mm		200-34655	200-34662-11	1	
	L = 5mm		200-34449	200-34449-01	1	
Spacer for short optical length cell K	for 1mm	J		204-21473-03	1	Not required
	for 2mm			204-21473-01	1	
	for 5mm			204-21473-02	1	
Micro multi-cell (8 cells) optical length 10mm and required sample volume of 100μl more		M	220-92404		1	Not required
Micro multi-cell (16 cells) optical length 10mm and required sample volume of 100μl more		N	220-92403		1	Not required

Nomenclature	Optical length	Shape	Quartz cell (S cell)	Capacity	Optical width of cell	Special holder	Remarks
Flow cell	L = 10mm	I	200-34670	1.5mL	4×36	Not req'd, but front plate with hole req'd	For general use, without tubes
Flow cell for Syringe Sipper	L = 10mm	P	220-92618	33μl	ø2 × 10	Not required	include tubes

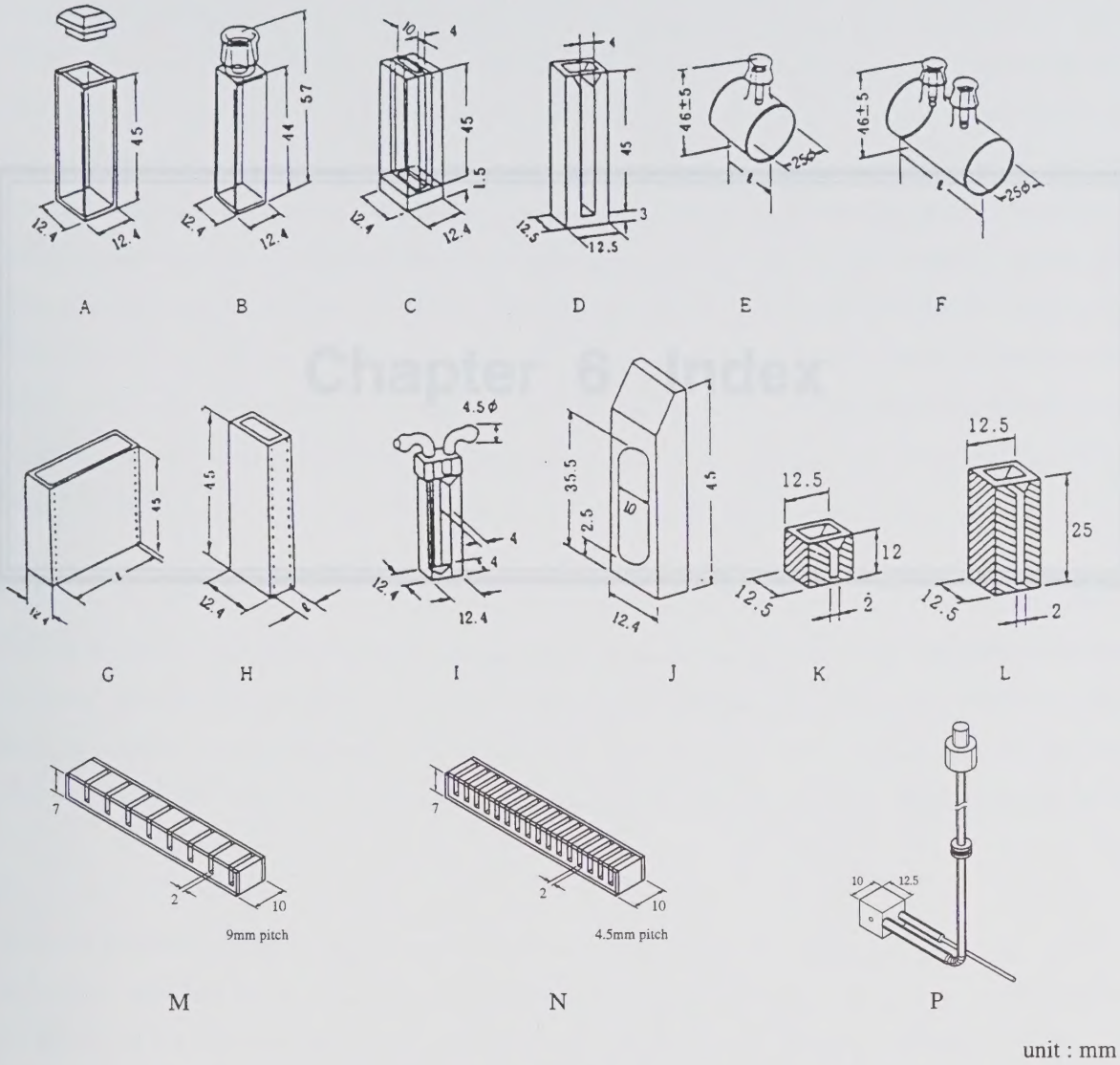

Fig.5.8.1 Optional Cell Shapes

Chapter 6 Index

6. Index

A

A/D converter 2-12
AC Power Cord 1-2
Ambient Temperature 4-3
Attachment Connector (I/O 1) 2-4
Attachment Connector (I/O 2) 2-4
Attachment Connector (I/O 3) 2-4
Auto Sample Changer ASC-3 5-21
Auto Sample Changer ASC-5 5-21
AUTO ZERO Key 2-7

B

backup battery 3-3
Baseline Correction 4-3
Baseline Flatness 1-7
Baseline Stability 4-2
Baseline dimensions 4-2

C

CE Key 2-8
Cell Holder 2-6
Cell holder assembly 3-17
Cell Holder Set Screws 2-6
Constant temperature Cell Holder 5-21
Constant-temperature water circulating device TB-8 5-21
Contrast 2-5
Cover, Sample Compartment 2-6, 5-12
CPS-240 5-8
Cursor Keys 2-7

D

D2 Lamp Energy 3-4
Daily Maintenance & Periodic Maintenance 3-2
Deuterium Lamp 2-9

Diffraction grating 2-10

E

Eject Button 2-5
Electrical System 1-12
ENTER Key 2-7
Entrance slit 2-10

F

Filter 2-10
Function Keys 2-7

G

GOTO WL Key 2-7
Ground 1-5
Ground Adapter 1-2
Ground Terminal 2-4

H

Hardware Specifications 4-2
holographic grating 2-11
Humidity 4-3

I

IC Card 5-18
IC Card Slot 2-5
Initialization & Error Display 3-3
Installation Site 1-4
Instrument Baseline Correction 3-6

K

Keyboard 2-7

L

λ Org 3-4

LCD Unit 2-2

LED 2-2

Light source compartment 2-9, 3-9

Light source cover 3-10

Light Source Org 3-4

Light Source Replacement 3-9

Light Source Specifications 3-8

Light source switch wavelength 2-9

M

measurement mode 1-7

Micro Cell Holder with mask 2-11, 5-21

minimum floor space required for installation 1-4

MODE Key 2-8

Multi-cell Holder Drive Connector 2-6

Multi-cell Sample Compartment 5-5

N

Noise Level 4-3

Numeric Keys 2-8

P

peristaltic pump 5-10

Photometric Accuracy 4-2

Photometric Range 4-2

Photometric repeatability 4-2

Positional relationship of cell holder and light 2-11

Power Connector 2-3

power consumption 1-5

Power Switch 2-3

pre-amplifier 2-12

PRINT Key 2-8

Printer 5-2
Printer Connector (Centronix) 2-5

R

RAM Check 3-3
Recording Range 4-2
Replacing Fuses 3-13
RETURN Key 2-7
ROM Check 3-3
RS-232C 2-4

S

Sample Compartment 4-3
Sampling Interval 4-2
Schematic of electrical system 2-12
Schematic of optical system 2-10
Sipper 5-10, 21
Software Specifications 4-4
Spectral Band Width 4-2
Specular reflectance Measuring Attachment 5° angle 5-21
Standard Accessories 1-2
START/STOP Key 2-7
Stray Light 4-2
Super Micro Cell Holder 5-21

T

The dimensions of the UV-1601 1-4
Thermal printer 5-2
Tungsten Halogen Lamp 2-9

V

Voltage Selector 1-6, 2-3

W

W Lamp Energy 3-4
Wavelength Repeatability 4-2
Wavelength Accuracy 4-2
Wavelength Display 4-2
Wavelength Range 4-2
Wavelength Scanning Speeds 2-4
Wavelength Setting 4-2
Weight 4-3
Window Plate 2-10

Record of Revision

Date	No.	Changed Page	Description
94.7	206-96062A	1	
95.11	206-93068B	2-1, 2-8, 3-6, 3-7, 3-14, 5-2, 5-11	
96.12	206-93068D	Ⅰ, Ⅱ, Ⅲ, 1-2, 1-4, 1-5, 1-12, 2-3, 2-9, 3-2, 3-4, 3-5, 3-9, 3-13, 3-14, 3-15, 3-16, 3-17, 4-2, 4-3, 4-4, 5-1, 5-7, 5-9, 5-15, 5-16, 5-18	CE (LV)
97.5	206-93068E	総目次, 1-7, 1-8, 1-9, 1-10, 1-11, 2-4, 2-9, 3-2, 3-4, 3-6, 3-9, 3-11, 3-12, 4-4, 4-5, 5章目次, 5-2, 5-4, 5-5, 5-6, 5-7, 5-8, 5-9, 5-10, 5-11, 5-12, 5-13, 5-14, 5-15, 5-16, 5-17, 5-18, 5-19, 5-20, 5-21, 5-22, 5-23, 6-2, 6-3, 6-4, 6-5	

Note) A…Added Page No.
D…Deleted Page No.

SHIMADZU CORPORATION

SHIMADZU CORPORATION. International Marketing Division
3. Kanda-Nishikicho 1-chome, Chiyoda-ku, Tokyo 101-8448, Japan
Phone: 81(3)3219-5641 Fax. 81(3)3219-5710
Cable Add.:SHIMADZU TOKYO

SHIMADZU SCIENTIFIC INSTRUMENTS, INC.
7102 Riverwood Drive, Columbia, Maryland 21046, U.S.A.
Phone: 1(410)381-1227 Fax. 1(410)381-1222 Toll Free: 1(800)477-1227

SHIMADZU DEUTSCHLAND GmbH
Albert-Hahn-Strasse 6-10, D-47269 Duisburg, F.R. Germany
Phone: 49(203)7687-0 Fax. 49(203)766625

SHIMADZU (ASIA PACIFIC) PTE LTD.
16 Science Park Drive #01-01 Singapore Science Park, Singapore 118227, Republic of Singapore
Phone: 65-778 6280 Fax. 65-779 2935

SHIMADZU SCIENTIFIC INSTRUMENTS (OCEANIA) PTY. LTD.
Rydalmere Business Park, Unit T, 10-16 South Street, Rydalmere N.S.W. 2116, Australia
Phone: 61(2)9684-4200 Fax. 61(2)9684-4055

Overseas Offices
Istanbul, São Paulo, Beijing, Shanghai, Guangzhou, Shenyang, Chengdu, Moscow

1998, 07

3500-07800-440TD (D-1097)